Case Study of Ductile Iron Casting Plant

Kyle Rademacher
University of Michigan
Industrial Assessment Center

Presentation Outline

- Plant Background
- Process Description
- Energy Use, Cost and Distribution
- Opportunities for Savings
- Difficulties Encountered
- Recommendations

Background

- Ductile Iron Casting
  - Northern MI
  - Automotive Industry Components
    - Powertrain
    - Suspension
    - Drivetrain

Process Description

- Raw Materials Received (Scrap Iron, Other Materials)
- Melted Using Regenerative Thermal Oxidizer (RTO) and Cupola
- Poured Into Collector → Ladles
- Ladles Into ‘A’ or ‘SPO’ Lines
- Left To Cool In Molds

Annual Energy Use and Cost

- Electricity
  - ≈ 31,000,000 kWh (106,000 MMBtu)
  - 7,800 - 8,000 kW Demand
  - $2,885,000
- Natural Gas
  - 110,000 MMBtu
  - $890,000
- Total Cost
  - $3.7 Million

Monthly Energy Costs

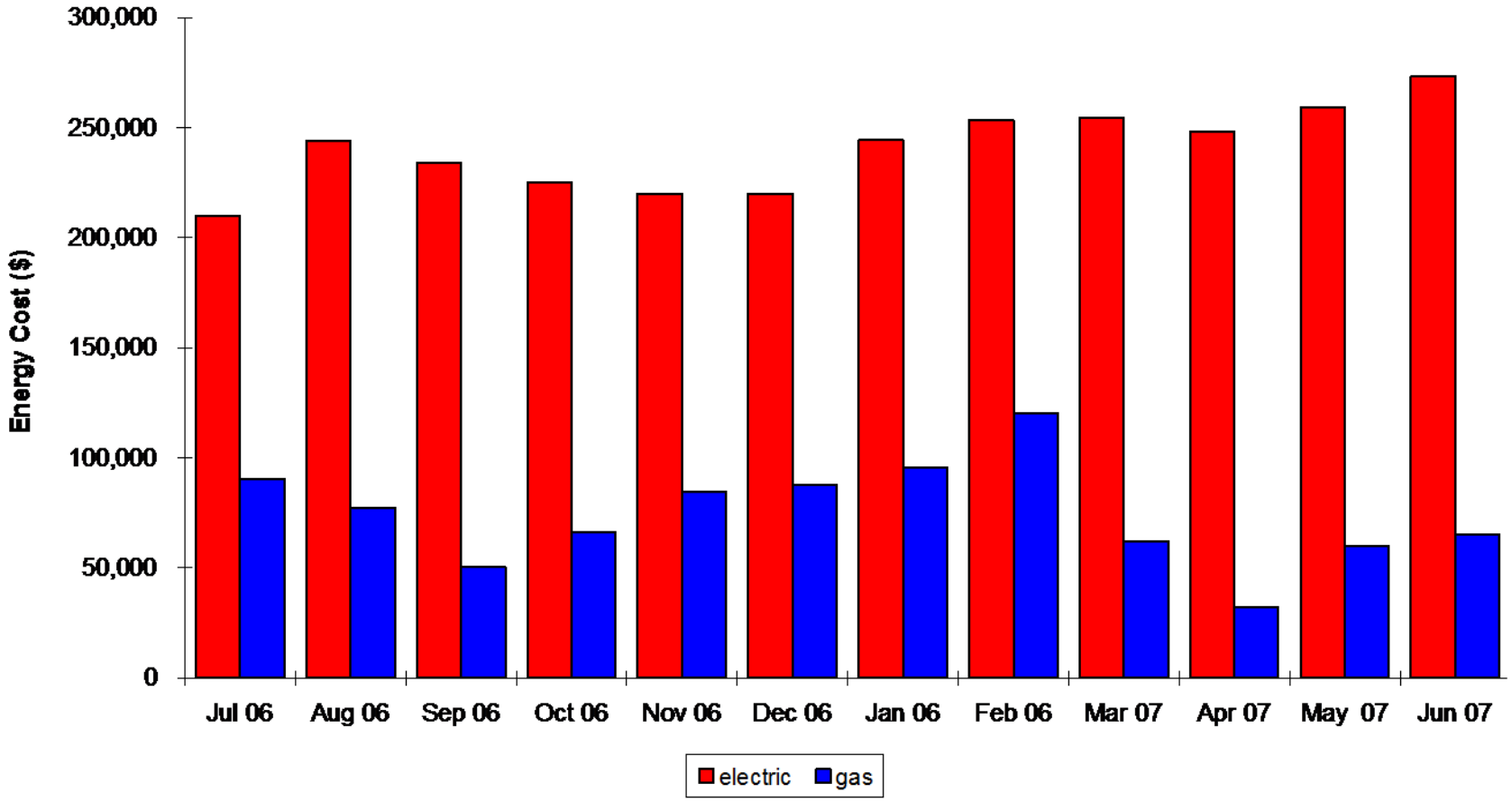

Monthly Energy Use

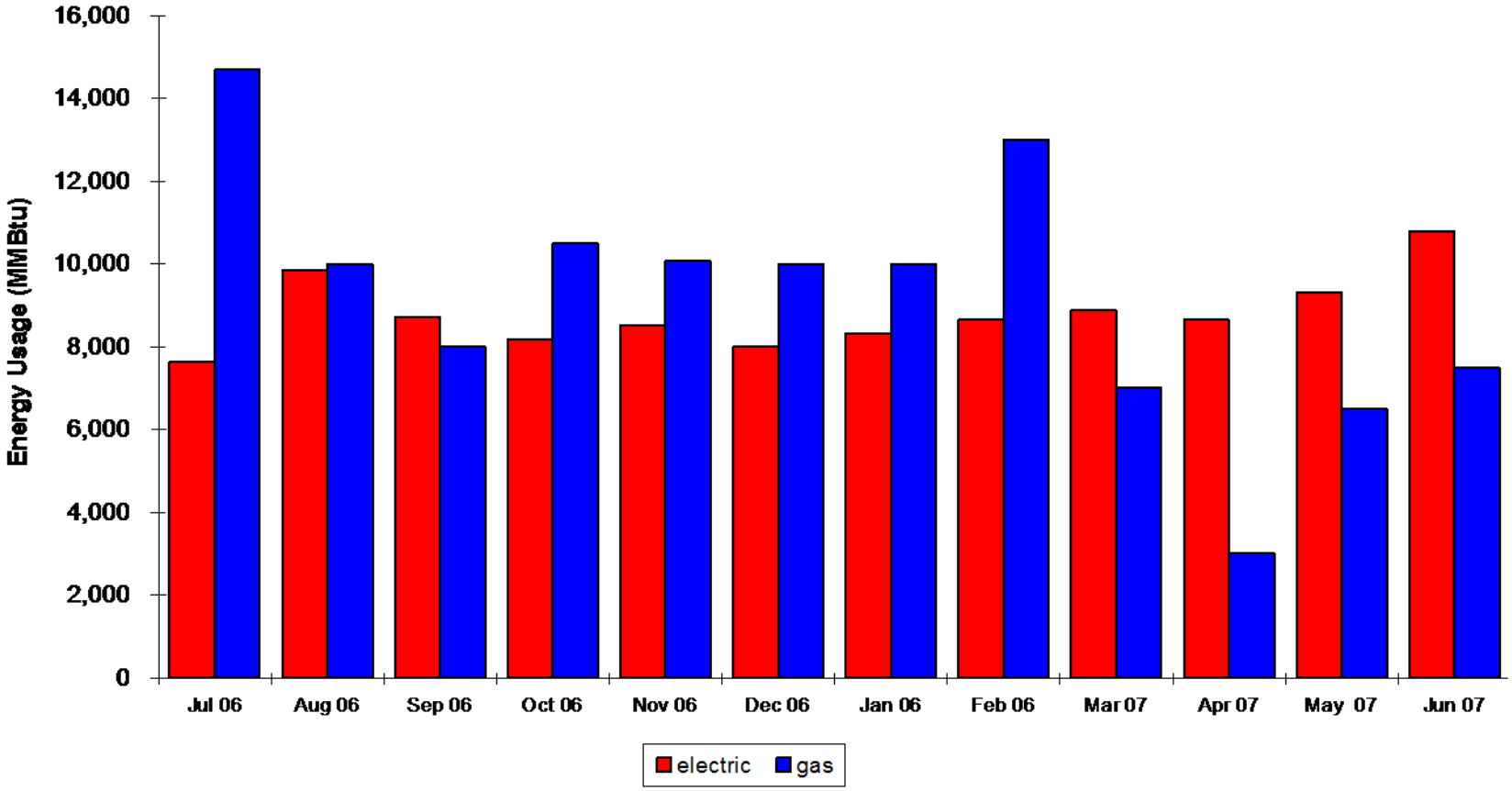

Distribution of Energy Use

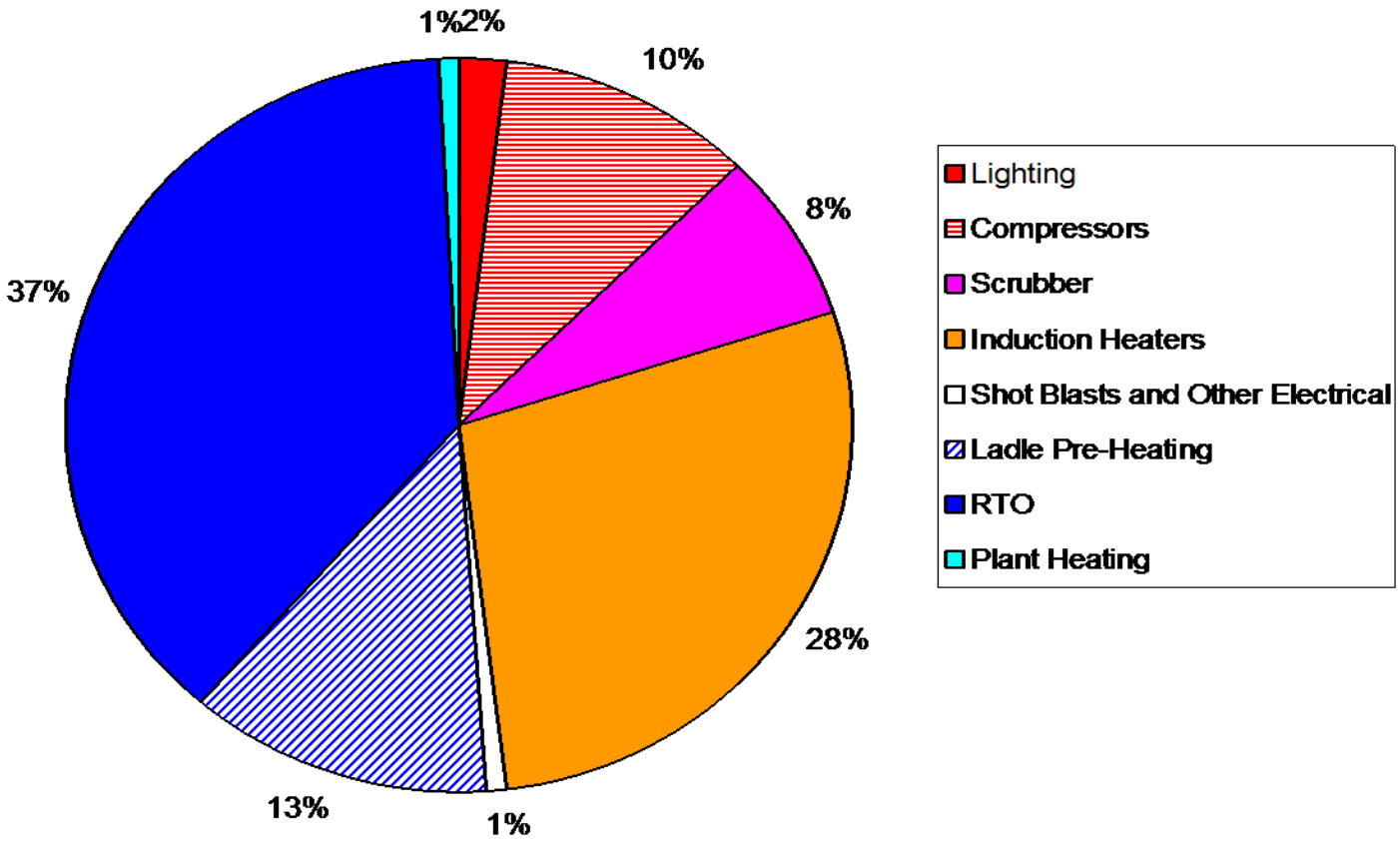

Opportunities for Savings

- Regenerative Thermal Oxidizer (RTO)
- Induction Heating
- Ladle Pre-Heating
- Compressors
- Lighting

Difficulties Encountered

- Energy Intensive Process
- Building Openings
- Large Building Volume
- Air Quality Concerns

Recommendations

- Cupola Heat Capture
- Reduce Natural Gas Flow During Ladle Pre Heat
- Repair Compressed Air Leaks
- Install Variable Speed Drive for Cupola Fan Motor
- Install Efficient Lighting

Heat Capture Above Cupola

- Water-to-Air Heat Exchanger
- Winter Space Heating
- $150,000 Estimated Cost Savings
- $60,000 Implementation Cost
- 5 Month Payback

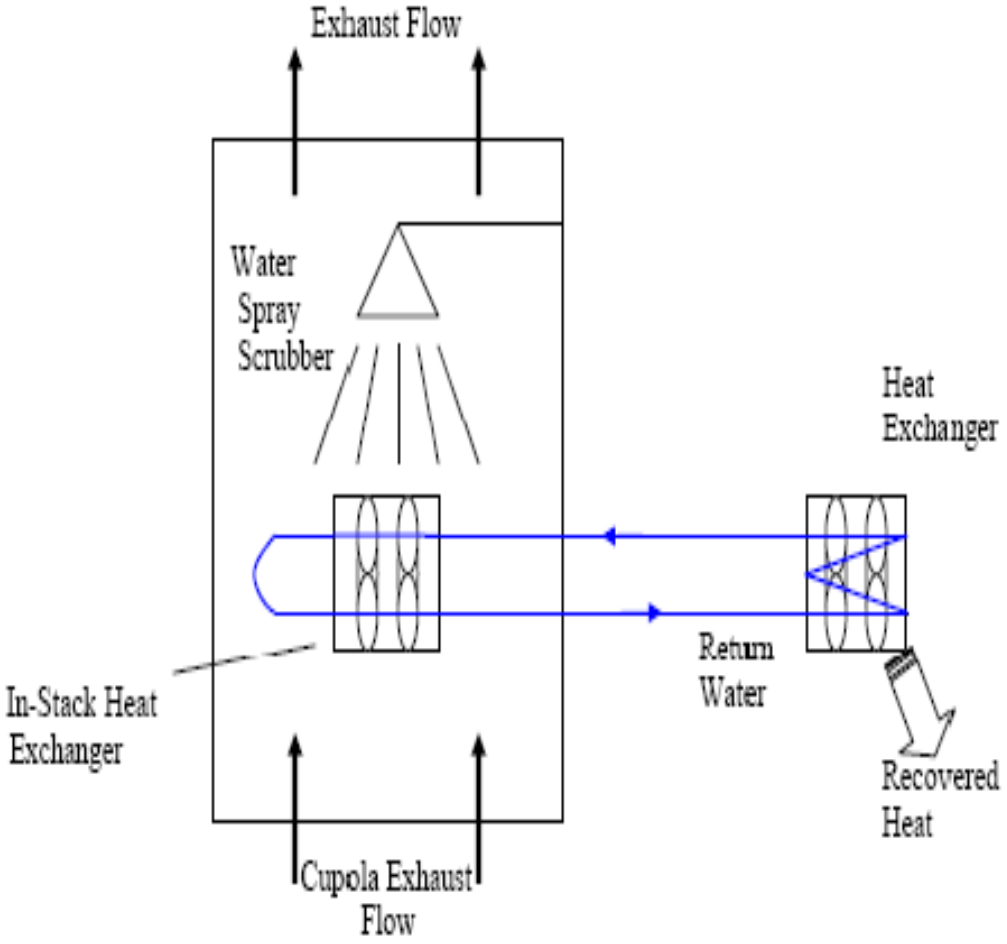

IAC UM329 Fig. 4.1.1

Reduce Natural Gas Flow During Ladle Pre Heat

- Installation of Lid
- Ladle Interior 2,600°F
- Thermal Circuit of Cross Section
- $115,000 Estimated Cost Savings
- $12,000 Implementation Cost
- Less Than 1 Month Payback

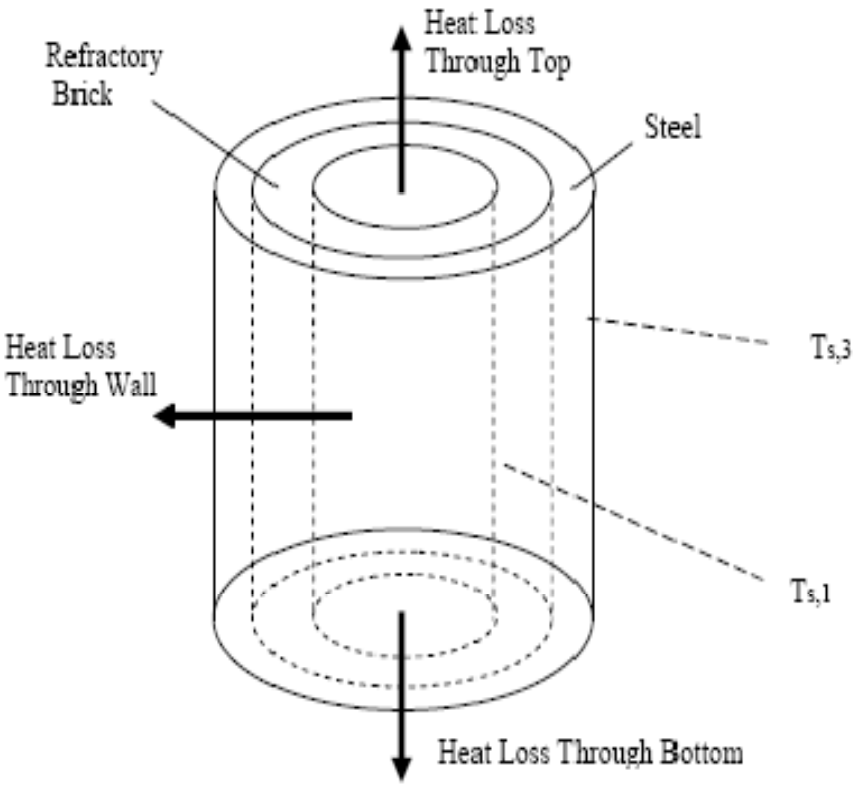

IAC UM329 Fig. 4.2.1

Repair Compressed Air Leaks

- 200 hp Compressor Ran During Weekends
- No Process Work
- $75,000 Estimated Cost Savings
- $40,000 Estimated Implementation Cost
- 6 Month Payback

Install Variable Speed Drive for Cupola Fan Motor

- Throttled Valves – Motor at Full Load
- 1,250 hp Cupola Motor 20 Hours/Day
- Motor Master +3.0
- $40,700 Estimated Cost Savings
- $265,000 Estimated Implementation Cost
- 6.5 Year Payback

Install Efficient Lighting

- Metal Halide 400 W to 360 W
- T12 Magnetic to T8 Electronic
- $11,400 Estimated Cost Savings
- $6,300 Estimated Implementation Cost
- 7 Month Payback

Summary

- Total Energy Use: 215,000 MMBtu/yr
- Independently, Recommendations Save
  - ≈ 39,000 MMBtu/yr, 18% Energy Use
  - $396,000/yr, 10.5% Energy Costs
- $382,000 Estimated Implementation Cost
- 1 Year Payback

Questions?

Summary

Summary of Savings and Costs						
AR No.	Description	Energy Savings (Units/yr)	Other Savings (Units/yr)	Estimated Savings ($/yr)	Resource Saved	Implementation Cost ($)
1.	Capture Cupola Heat	19,050 MMBtu/yr	-	$154,115/yr	Natural Gas	$60,000
2.	Reduce Natural Gas Flow During Ladle Pre-Heat	14,263 MMBtu/yr	-	$115,389/yr	Natural Gas	$12,000
3.	Repair Compressed Air Leak	894,840 kWh/yr	1,790 kWm/yr	$74,880 /yr	Electric Energy	$39,375
4.	Install Variable Speed Drive	620,424 kWh/yr	-	$40,784/yr	Electric Energy	$265,000
5.	Install Efficient Lighting	136,890 kWh/yr	274 kWm/yr	$11,455 /yr	Electric Energy	$6,300
Totals		**38,952 MMBtu/yr**	-	**$396,623 /yr**		**$382,675**

Calculations: Cupola Heat Capture

- $ES = FR \times D \times (T_E - T_A) \times SH \times HRE \times CF_1 \times CF_2 \times CF_3 \times CF_4 \times OH$
- T_E = temperature of exhaust air from cupola, 1,900°F
- T_A = temperature of exhaust air at heat exchanger, 1,400°F
- Density (D), specific heat (SH) taken at 1,400°F
- Conversion factors: $ft^3 \rightarrow m^3$,min → hr, kJ→ Btu, Btu → MMBtu

Calculations: Reduce Gas Flow

- Q_{wall}: Inverse term with convective heat transfer coefficient, h→large, term≈0
  - Conductivity terms: $\ln(R_{i+1}/R_i)/(2\pi KL)$
- Q_{bottom}: $Q_{wall} \cdot SA_{ladle\ wall}/SA_{ladle\ bottom}$
- Q_r: Pipe velocity of air →Volume flow $rate_{air}$
  - $CH_4 + 2.2(O_2+3.76N_2) \rightarrow 10.5$ mol air
  - Volume flow $rate_{ng}$=Volume flow $rate_{air} \cdot (mol_{ng}/mol_{air})$
- Q_t: $Q_r - Q_{wall} - Q_{bottom}$
  - 70% lid retention factor

Calculations: Air Leaks

- Volumetric $flow_{lost} \rightarrow$ hp needed to compress
- Given hp$\rightarrow$energy and demand savings
- Back-calculation of flow rate, hp, number of leaks for implementation cost

Calculations: Variable Drive Motor

- EU = 0.746 x (FH x HPF/FEF + LH x HPL/LEF)
- Difference between current and proposed: hp load at low flow

Calculations: Lighting

- Difference in kW ratings
- T12 magnetic→T8 electronic
  - Consume 35% less energy
- Metal Halide 400W → Metal Halide 360W
  - Consume 9% less energy