VENTILATION GUIDE FOR AUTOMOTIVE INDUSTRY

Machining Processes

Paint Shops & Areas

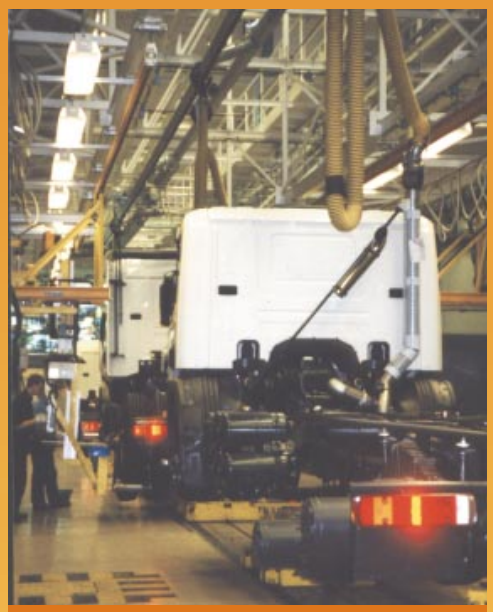

Assembly Plants

Body Shops

ABB · Celero Support · DaimlerChrysler · Ford · Lindab · PlymoVent · Saab Scania · Scania

ZHIVOV & Associates, L.L.C.

1st Edition 2 0 0 0

Published by:

Heating/Piping/AirConditioning HPAC ENGINEERING

VENTILATION GUIDE FOR AUTOMOTIVE INDUSTRY

1st Edition

Prepared by the International Task Force

Chairman: Alexander M. Zhivov, Ph.D., P.E.

Published by:

Heating/Piping/Air Conditioning Engineering
Penton Media, Inc.
Penton Media Bldg.
1300 E. 9th Street
Cleveland, OH 44114-1503

© 2000 **Zhivov & Associates, L.L.C., Champaign, IL**

1. INTRODUCTION

Ventilation Guide for Automotive Industry (Guide) is the result of practical experiences by the members of the International Task Force and a compilation from different sources of information from around the world (regulations, standards, books and technical papers, examples of good and bad practices from different consulting and auto manufacturing companies). The Guide follows the design procedure adopted by the group of international experts for the serial of Applications in Industrial Ventilation Design Guidebook (DGB, 2000). The Guide is not intended to become a law, standard or to replace any of existing international, national, industry or company standards, manuals or guidelines. With the dynamic developments of production processes in auto manufacturing industry, there is an essential need to match manufacturing and construction processes and schedules with an appropriate approaches in ventilation systems designs and the state-of-the-art ventilation technologies. The experts participating in development of this Guide view it as a document containing a summary of essential information, facilitating better understanding and communication between facilities and process engineers, consultants and HVAC systems manufacturers providing services to the automotive industry. The technologies described in the Guide shall be applied with consideration of specific climatic conditions and geographical location, national regulations, building designs and auto manufacturing company priorities and internal policies. The international Task Force members nor collectively or individually assume any responsibility for any inadvertent misinformation, or for the results in the use of this document.

INTERNATIONAL TASK FORCE

The document was prepared by the International Task Force:

Michael Busch - Ford Motor Co. (Germany) [Chapter 6]
Larry Cinat - BEI Associates, Inc. (USA) [Chapter 4]
Goran Danielsson - ABB Contracting AB (Sweden) [Chapters 10,11]
Bruce Davis - Deere and Co. (USA) [Chapters 5,9]
James Dolfi - Ford Motor Co. (USA) [Chapter 5]
Roy Durgan - Monsanto EnviroChem Co. (USA) [Chapter 6]
William Edens - SSOE (USA) [Chapter 6]
Piero Gauna - FIAT Engineering (Italy) [Chapter 4]
Wolfgang Hera - DaimlerChrysler AG (Germany) [Chapters 4,9]
William Johnston – Ford Motor Co. (USA) [Chapter 6]
Dick Kvarnström - Scania Partner AB (Sweden) [Chapters 4,9]
Wayne Lawton - Giffels Associates, Inc. (USA) [Chapters 5,6,12]
Kenneth Lennartsson - Lindab AB (Sweden) [Chapter 12]
Mike Lepage - RWDI, Inc. (Canada) [Chapter 14]
Gunnar Lindeström - Plymovent AB (Sweden) [Chapter 5,7]
Wayne Lutz - Plymovent Corp. (USA) [Chapters 6,7]
Jerker Lycke - ABB Contracting AB (Sweden) [Chapters 9,10,11]
Clive Nixon – Fenwal (USA) [Chapter 5]
Manfred Pack - Ford (Germany) [Chapters 3,4,9,11]
Gary Pashaian - Monroe Environmental Corp. [Chapter 6]
John Richards - SH&G, Inc. (USA) [Chapter 8]
Adolf Rymkevich – Acad. of Refrigeration and Food Technology (Russia) [Chapters 9,11]
Florian Sack - AUDI AG (Germany) [Chapters 5]
Jurgen Schneider- DaimlerChrysler AG (Germany) [Chapters 4,9]
Eugene Shilkrot - Termec (Russia) [Chapter 10]
Hasse Spetz - Celero Support AB, Volvo Group (Sweden) [Chapter 4,5,11]
Mathew Vondrasek - Haden, Inc. (USA) [Chapter 8]
Bede Wellford - Airxchange, Inc. (USA) [Chapter 11]
Daniel White - General Motors Corp. (USA) [Chapter 6]
Alfred Woody - Giffels Associates, Inc. (USA) [Chapters 3,4,6,7,9]
Alexander Zhivov - Zhivov & Associates, L.L.C. (USA) - Task Force Chair [Chapters 1 through 13]

Reviewers

Sten-Arne Hakanson - Celero Support AB (Sweden)
G.A. (Bill) Navas - SMACNA (USA) [Chapter 12]
Karl Pontenius - Scania Partner AB (Sweden)
Bill Heitbrink - NIOSH (USA) [Chapter 5]
Milad (Chris) Wakim - Ford Motor Co. (USA)
Alfred Woody – Albert Kahn Associates, Inc. (USA)

The development of this Guide would not be possible without funding from **ABB Contracting AB, Celero Support AB, DaimlerChrysler AG, Ford Motor Company, Lindab AB, Plymovent AB, Scania Partners AB and Zhivov & Associates, L.L.C.**

Special thanks to the following companies which contributed to development of the Guide by sharing their information and providing examples of HVAC technology used in auto manufacturing facilities: **ABB Contracting (Sweden), Audi (Germany), Bentler Industries (U.S.A.), BMW (Austria, Germany), DaimlerChrysler (Brazil, Germany, U.S.A.), Deer & Company (U.S.A.), EHC Technik (Sweden), Ford Motor Company (Brazil, Germany, UK, U.S.A.), FIAT Engineering (Italy), General Motors (U.S.A.), Jacob Handte & Co. (Germany), Krantz-TKT (Germany), Lindab (Sweden), Monroe Environmental (U.S.A.), Plymovent (Sweden), Renault (France), Scania Partner (Sweden), Subaru-Isuzu Automotive (U.S.A.), Toyota Motor Manufacturing (U.S.A.), Unipart Yashiyo Technology (UK), Vauxhall Motors Ltd. (UK), Volkswagen (Germany), Volvo Cars (Belgium, Sweden), Volvo Trucks (Sweden).**

Many helpful criticism of early drafts was received from participants of four International Conferences and Workshops, which took place in Boken_ s (Sweden, 1998), Detroit (U.S.A., 1999), S_u Paulo (Brazil, 2000) and in Aachen (Germany, 2000).

2. DOCUMENT SCOPE

The Guide introduces the reader to various types of ventilation systems, including general supply and exhaust and local exhaust, for control of contaminants and to maintain thermal comfort in production halls with processes specific to automotive industry, principles of system design and selection, and drawings that illustrate ventilation techniques. Also, this document contains or refers to information on production processes, contaminants found in production processes and their sources and process related measures allowing the emission rates reduction.

With the understanding that automotive production has a few specific processes (e.g., welding on assembly lines, engine testing and maneuvering at the end of assembly line, car body painting, etc.) and a numerous processes similar to those found in other industries, the Guide contains only the information primarily related to specific processes and refers to the information that is available from other sources.

TABLE OF CONTENT

1. Introduction

2. Document Scope

3. Design methodology

4. **Design Criteria**
   - 4.1. Meteorological data
   - 4.2. Indoor air temperature and velocity
   - 4.3. Supply and exhaust air rates
   - 4.4. Indoor air quality
   - 4.5. Air distribution method selection
   - 4.6. HVAC equipment selection
   - 4.7. References

5. Body shop and component manufacturing shops with welding and joining operations
   - 5.1. Process description.
   - 5.2. Types of contaminants.
   - 5.3. Target Levels
   - 5.4. Process related measures allowing the emission rates reduction.
   - 5.5. Ventilation
     - 5.5.1. Principles of Ventilation
     - 5.5.2. Local Exhaust Ventilation
     - 5.5.3. General Ventilation
     - 5.5.4. Fume Filtration
     - 5.5.5. Fire and explosion protection for exhaust systems
     - 5.5.6. Explosion protection with aluminum grinding and polishing operations
   - 5.6. References
   - Appendix 5.1. Fume Generation Data
   - Appendix 5.2. Fume Constituent Concentration Data
   - Appendix 5.3. Fume Generated per amount of Electrode Used

6. Machining processes

6.1. Process description
6.2. Contaminant emission
6.3. Target levels
6.4. Measures to reduce occupational exposure to metalworking fluids
6.3.1. Coolant selection
6.3.2. Considerations for the Design of Machine Enclosures for Airborne Contaminants Control
6.5. Ventilation
6.5.1. Principles of Ventilation.
6.5.2. Process and Local Exhaust Ventilation
6.5.3. Re-circulation
6.5.4. General Ventilation
6.5.5. Oil mist separation
6.6. References.
Appendix 1. Machine types.
Appendix 2. Enclosures
Appendix 3. Approximate airflow rates to be extracted from machines
Appendix 4. Coolant types.

7. Assembly line

7.1. Process description
7.2. Process emissions overview
7.3. Sources of auto emissions
7.4. Target levels
7.5 Process related measures to reduce occupational exposure to vehicle exhausts and fuel vapors.
7.6 Ventilation
7.6.1. Local exhaust systems.
7.6.2. General supply ventilation
7.6.3. General exhaust systems
7.6.4. Exhausted air filtration and recirculation.
7.7. References

8. Paint shops and areas

8.1. Process description.
8.2 Qualitative analysis of major loads and emissions from paint process
8.3. Coordination of the HVAC and process engineers
8.4. Heat emission to the building
8.5. Target level
8.6. Ventilation
8.6.1. Coordination between process and building ventilation.
8.6.2. General supply systems
8.6.3. General exhaust systems
8.6.4. Air distribution
8.7. References

9. General Ventilation Systems

9.1. Types of general ventilation systems
9.2. General supply systems
9.3. General exhaust systems
9.4. Centralized and decentralized (modular) systems
9.5. Constant air volume (CAV) and variable air volume (VAV) systems
9.6. Air handling unit
9.7. Working environment heating and cooling
9.7.1. Heating systems
9.7.2. Cooling systems
9.8. References

10. Quantity and methods of air supply

10.1 Quantity of supply air
10.2. Air supply methods
10.4. Selection and design
10.5. Typical practices of air supply into auto manufacturing facilities
10.5.1. Machining shops
10.5.2. Body shops and other shops with welding operations
10.5.3. Assembly shops
10.5.4. Paint shops
10.6. References

11. Return (recirculation) air and energy recovery from exhaust air

11.1. Outside and recirculating air flow
11.2. Requirements to the recirculating air cleanliness
11.3. Energy recovery
11.4 References

12. Special requirements to duct selection and design

12.1 General considerations
12.2. Special requirements to ducts used for metalworking fluids (MWF) collection systems.
12.3. References

13. Methods of building protection from warm/cold air drafts through gates and other apertures

14. Outdoor air pollution prevention

3. DESIGN METHODOLOGY

The following methodology describes a process of the HVAC system selection and design. It reflects all important stages of design, and allows all parties involved in the design process(e.g., architects, process and mechanical engineers, building owners, etc.) for better understanding of what information is required for HVAC system design and what is the order of tasks to be performed. Decision tree of design methodology is illustrated in Figure 3.1. The lifetime HVAC system analysis is illustrated in Figure 3.2. Branches of the decision tree are discussed in detail in Industrial Ventilation Design Guidebook. Fundamentals. 2000. Academic Press.

Notes:

Step 1: Given Data. Identify and list the data specific to site location and independent from the design process (e.g., climatic conditions). Obtain drawings, data specifications of HVAC equipment and systems already in place on the same site.

Step 2: Process Description.

- Learn about production process and identify sub-processes;
  - Identify sources of heat and impurities emissions into the building, areas occupied by process equipment and by people; duty cycles, requirements from production to:
    - the indoor environment,
    - process enclosure,
    - ventilation equipment used in the building,
    - make-up airflow rate.
  - Divide each process into sub-processes with a distinct inputs and outputs to the indoor and outdoor environments
- When the process/sub-processes are not well defined during the initial period of design, obtain the data from similar processes based on the recent successful practices. Obtain and use more precise data as soon as it become available.

Step 3. Building Layout and Structures.

- Collect information on building layout, structures, envelope, apertures and their characteristics (for heating and cooling loads calculation, outdoor air infiltration and exfiltration);
- Compile data on available utilities and their costs (gas, hot water, chilled water, and electricity)
- Divide building into zones based on division of processes and building layout;
- Reserve space and consider structures required for HVAC.

Step 4. Target Level Assessment.

- Define target levels for indoor (occupied zone) and outdoor (exhaust) air.
- Specify design conditions in which the target levels to be met;
- Define target levels for HVAC systems (e.g., reliability, energy consumption, investments and life cycle costs, etc.)

Step 5: Source description. Define characteristics of heat/impurities sources and methods to calculate emission rates (loads) contributed by these sources.

Step 6: Loads calculation. Calculate emission rates (loads) from individual sources.

Step 7: Local protection. Analyze sub-processes (sources) to reduce their impact on the working conditions near these sources and to reduce emission to the building environment.

Step 8: Calculate total loads to the building (building zone). Calculate total loads (heating, cooling, water vapor, contaminants) from different sub-processes (sources), building envelope, external sources, with supply and transfer air (from other building zones) and with infiltrating air. When summing up the loads from different sources consider possible time dependency of emissions and non-simultaneous operation of different process units.

Step 9: System selection.

- Select acceptable systems based on desired target levels that can be achieved with these system;
- Conduct technical and life cost analysis and choose the optimal one;
- Use systems allowing maximum flexibility in airflow rates and control strategies when selection of these systems is based on inaccurate (preliminary) data on production processes and volumes, and raw materials to be used in the building. Also, consider likelihood of future process changes. As the result, emission rates from these processes and total loads might be changed during the detailed design step.
- Consider constraints on the system selection if some equipment has been already selected and installed in the earlier design period.

Step 10: Equipment selection.

- Obtain the information on different types and performance characteristics for equipment, which can be used with the selected system;
- Select type(s) and the size(s) of the equipment based on its performance characteristics and nomenclature;
- Compare different types and sizes of equipment and select the optimal ones;
- Make a technical specification for selected equipment.
- Assess statutory requirements (flammability, health and safety, environmental)

Step 11: Detailed design.

- Check the most current information regarding production processes
- Make a detailed layout and dimensioning design;
- Specify control system(s);
- Consider special issues, e.g. thermal insulation, surfaces protection from condensation, fire protection, noise and vibration reduction, etc.;
- Assess clash conditions with other services
- Define points of use
- Develop a commissioning plan.

Backcouplings:

1. Source description - Target level assessment. If any new contaminating agent is identified, a target level for this agent should be specified.

2. Local protection - Loads calculation. If local protection is capable of emission rate reduction from the source, adjust the load.

3. Local protection - Target level assessment. When the source local protection does not allow to reach the desired target level, reconsider the target level.

4. Local protection - Process description. Consider methods to reduce emission from the source (e.g., thermal insulation, more tight enclosure)

5. Total loads calculation - Target level assessment.

- When a single contaminating agent has a major input in the total load, consider using less stringent target level for this agent to reduce the load;
- When a single source has a major input in the total load, consider using less stringent target level in the area close to this source to reduce the load.

6. Total loads calculation - Building layout and structures. When heat losses/gains through the building envelope have a major impact on total loads, consider changes in the building envelope design (better thermal insulation, reduced glazing area, etc) *or orientation*; consider process/building layout to separate the areas with high emission rates (e.g., "dirty" or hot zone) from the areas with sources having low emission rates ("clean" zones).

7. System selection - Total loads calculation. When neither system allow to achieve target levels or application of the system is not economically or technically feasible, check if there are any means to reduce total loads.

8. Equipment selection - System selection. If the type or the size of the equipment required for the selected system is not available, reconsider the choice of the system.

9. Detailed design - Source description. Based on the most current information regarding production processes and volumes, and raw materials to be used in the building, make adjustments to the selected systems and equipment when possible.

10. Detailed design - Building layout and structures.

- Identify required openings in structures
- Identify additional space and requirements to structures to accommodate HVAC systems.
- Assess clash condition
- Check for structural load assumptions and supports

DESIGN METHODOLOGY OF INDUSTRIAL VENTILATION

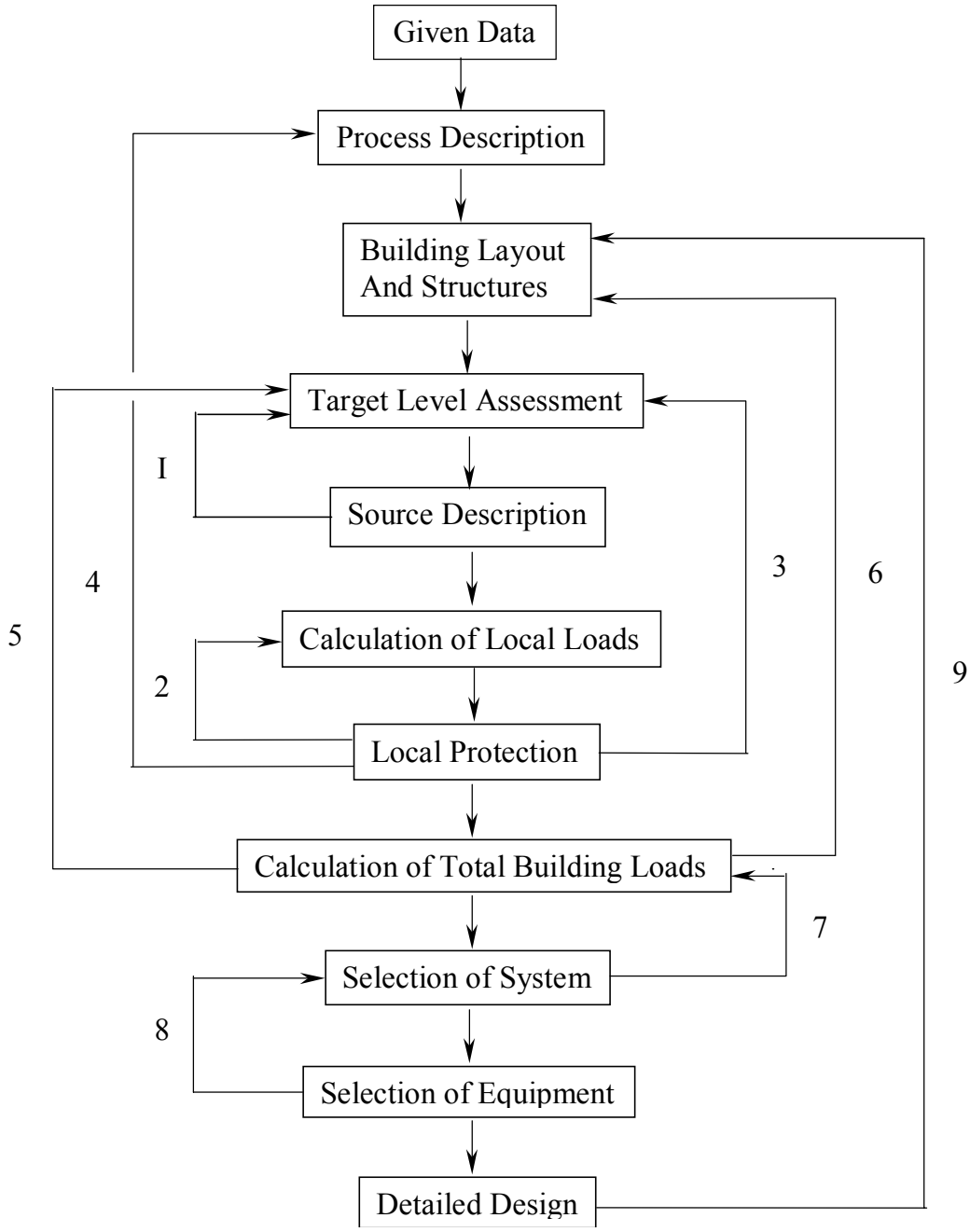

Figure 3.1.

DESIGN - CONSTRUCTION - USE

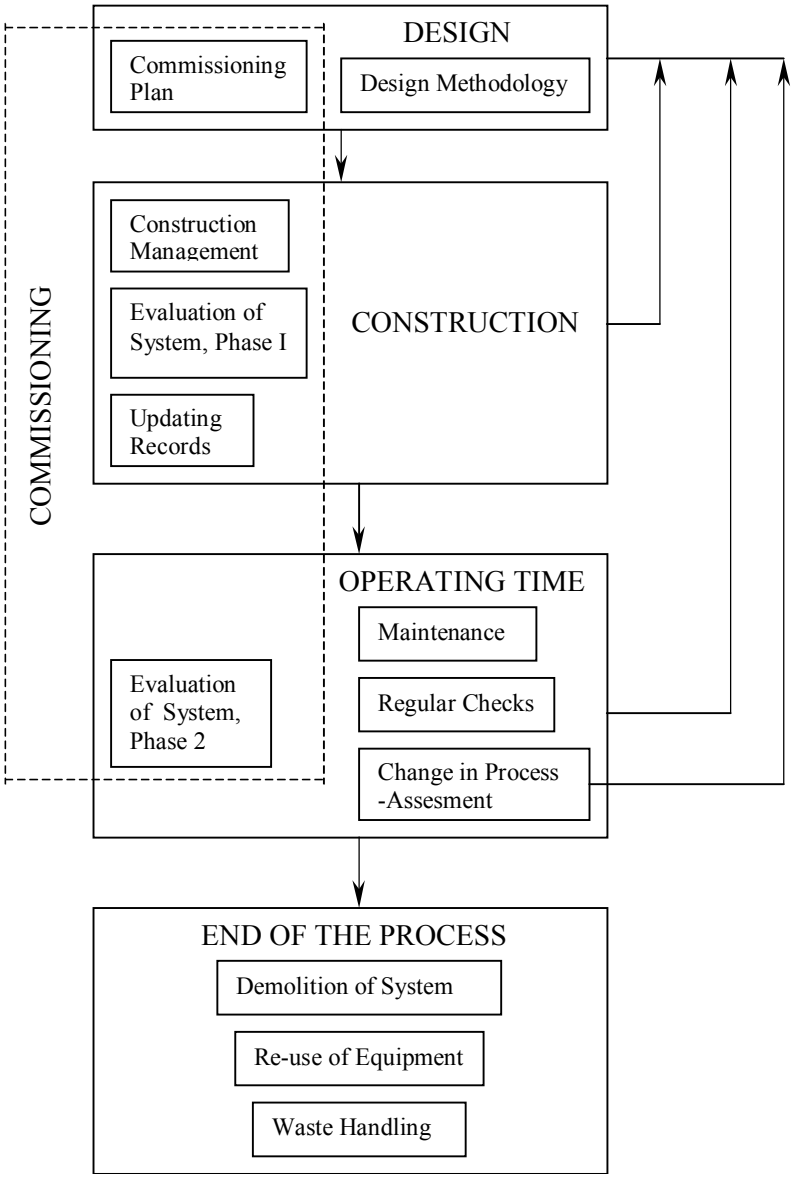

Figure 3.2.

4. DESIGN CRITERIA

4.1. Meteorological data. As the design conditions for outdoor air temperature, humidity and wind use the following information, which can be obtained from the National Climate Centers, WHO World Data Center or for the USA, Canadian and many international locations from ASHRAE Handbook [4]:

- Summer (cooling system design) - 1.0% Design Climatic Conditions;
- Winter (heating system design) - 99.0% Design Climatic Conditions.

4.2 Indoor air temperature and velocity. Examples of current practices in different auto manufacturing companies for selected shops are listed in Tables 4.1. - 4.4. The data for these Tables is compelled from company technical specifications, technical publications, and through private communications.

4.3. Supply and exhausted air rates. Calculations shall be performed to determine cooling and heating loads, contaminant emission rates, air flow rates for building pressurization, air flows to compensate air exhausted by process equipment and local exhausts. For supply air rates refer to Chapter 10. Air flow rates exhausted by process equipment obtain from process engineers. Airflow rates exhausted from process equipment enclosures and by local exhausts refer to corresponding sections of Chapters 5, 6, 7 and 8. For more detailed information on local exhaust design see ACGIH [1], ASHRAE Handbook [5]and DGB [8]. Outdoor supply airflow rates and cooling loads for production shops in Tables 4.1. - 4.4. are listed only for preliminary consideration. New general and local supply and exhaust systems shall be designed and equipped with control systems to maintain required airflow balance and building pressure at all foreseeable systems operation modes. Consult building and process engineers to obtain drawings and data specifications for all HVAC equipment and systems already in place on the same site or planned to be installed in the future.

4.4. Indoor air quality. For contaminant exposure limits refer to national regulatory documents (e.g., OSHA [2], ACGIH [2] for U.S.A., AFS [3] for Sweden, TRGS 900 [2] for Germany, GOST [9,15] for Russia). Industry and individual company policies on exposure limits are typically substantially lower. For the latest data, contact manufacturer industrial hygienists. Current (1998) and proposed exposure limits for contaminants related to processes discussed in the Guide are summarized in corresponding sections of Chapters 5, 6, 7 and 8.

4.5. Air distribution method selection. Air distribution method should be selected and designed such that air diffusers and duct system does not conflict with the production process. Air distribution shall allow to achieve the required thermal conditions in the occupied zone with a highest possible heat and contaminant removal effectiveness and the lowest life-cycle costs. For information on air distribution method selection and design refer to Chapter 11, ASHRAE Handbook [4] and DGB [8].

4.6. HVAC equipment selection. Specified materials and equipment shall comply with the applicable ISO, CEN, Europvent, and ANSI standards and under provision of National laws, standards and regulations, relating to the country of installation. Consult with auto manufacturer about existing company requirements and criteria. HVAC equipment shall be designed and equipped with all safety and operating controls required to meet the Insurance Underwriters' approval.

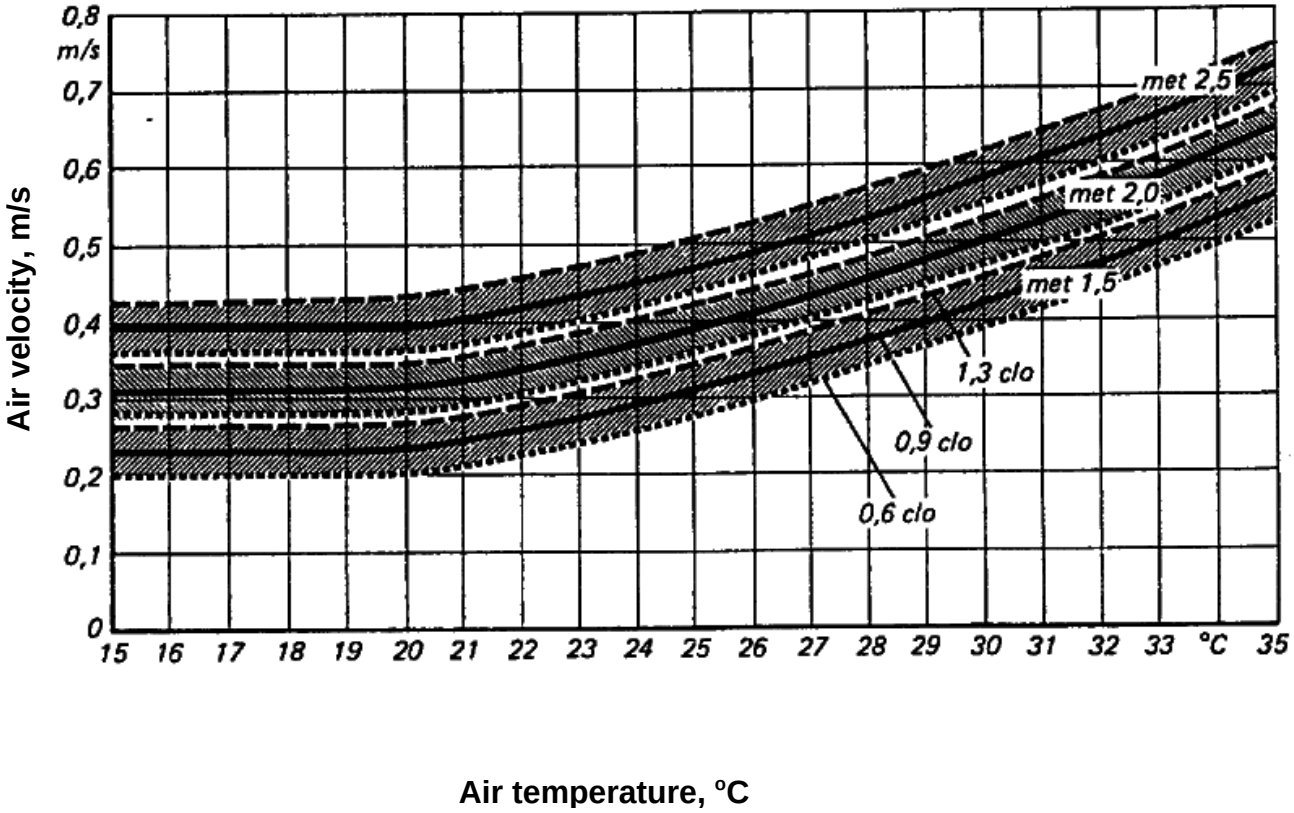

Figure 4.1. Thermal comfort in automotive production facilities (reproduced from VDI 3802, [18])

Table 4.1. Thermal comfort requirements, typical supply airflow rates and cooling loads for body shops and shops with welding and jointing operations of automotive plants.

Source of information	Location Latitude/ Altitude	Outdoor reference conditions: Summer DBT/WBT Winter DBT	Occupied zone air temperature, °C			Air velocity, m/s		Outdoor airflow rate, $m^3/(h\ m^2)$			Net process equipment heat release, W/m^2
			Summer		Winter	Winter	Summer	Winter	Summer		
			Non-tempered air system	Tempered air system					Non-tempered air system	Tempered air systems	
Toyota U.S.A. (1999) [17]	Georgetown, KY 38°18' /149m	32/24 -11.4	27	-	18			29.3	42		-
General Motors Corp. [23]	General info.		5 > OS	24	21			11-23	36.5-73	23-32	-
Ford Motor Co. [12]	General info.		32	28	17-21	0.5		25	40	25	32
Scania [16]	Stockholm, SWE 59° 35'/ 11m	24.2/16.2 -15	27 when t_{out} <27 t_{out} + 5, when t_{out} >27								
Volvo [20,21]	Goteborg, SWE 57° 67'/ 169m	24/19 -16	t_{out} + 4, when t_{out} >28	23 optimal	18 -22	0.15	0.25	15-25	15-25	-	-
Daimler-Chrysler, Windsor [22]	Windsor, ON	29.9/21.9 -15	-	24.5	20			38	-	38	50
Daimler-Chrysler, AG [6]	Sindelfingen. GER 48° 68'/ 419m	27.3/18.3 -10		17-21	??			15.8		23.7	
FIAT [11] North Italy Middle Italy South Italy	 45° 04'/ 20m 42° 26'/ 235m 40° 55'/ 196m	 33/23.4/-5 29/21.2/0 34 / 22/ -2		**t_{out} = -4**	18 18 18	- - 0.05 – 0.3		22 5 32	- - -	22 5 32	- - 186 (total)
VDI 3802 [18]	General info.		See graph in Figure 4.1								

Table 4.2. Thermal comfort requirements, typical supply airflow rates and cooling loads for machining shops of automotive plants.

Source of information	Location Latitude/ altitude	Outdoor reference conditions: Summer DBT/WBT Winter DBT	Occupied zone air temperature, °C			Air velocity, m/s (winter)		Outdoor airflow rate, $m^3/(h\ m^2)$			Net process equipment heat release, W/m^2
			Summer		Winter	Winter	Summer	Winter	Summer		
			Non-tempered air system	Tempered air systems					Non-tempered Air system	Tempered Air systems	
Scania [16] Machining Engine shop Engine assembly Machining with hardening	Stockholm, SWE 59° 35'/ 11m	24.2/16.2 -15	27 when t_{out}<27 t_{out}+ 5, when t_{out} _27	-	20-22 20-22 20-22 19-23	0.25 0.25 0.25 0.30	-	16-20 16-20 10-12 40	30 30 20 50	-	-
Toyota U.S.A. [17]	Louiville, KY 38°18' /149m	32/24 -11.4	-	27	18			29.3-36.6	-	29.3-36.6	-
General Motors Corp. [23]	General info		t_{out} + 5	24	21			11-24	55-73	24-42	-
Ford Motor Co. [12]	General info		32	28	18-21*	0.5		25	50	25	30
					18-21**	0.5		25	50	25	30
					18-21***	0.5		18	40	18	28
					18-22***	0.5		25	50	25	30
Ford Motor Co. [12]	Cologne, GER 50°87' /99m	27.7/18.3 -8.1						18.5	37		
	Bordeaux, FRA 44°83' /61m	30.0/20.8 -3.0						22.3	44.6		
	Taubate, BRA 23°62'S /803m	30.9/20.3 9.9						23.6	23.6		
Daimler-Chrysler USA [7]	Kenosha, WI 42°95' /211m		-	26.7	21.1						140-165
FIAT [11] Middle Italy South Italy	 43°48' /38m 40°55' /280m	 34/24/-1 33/24/-3	-	t_{out} = - 4	 18 18	0.05 - 0.3		 21 29	-	 21 29	 100 (total) 146 (total)
VDI 3802 [18]			See graph in Figure 4.1					20-75	20-75	20-75	50-250 (30 to 70% is removed by coolant or chips)

*- Machining
**-Engine shop
***-Engine assembly
****-Machining with hardening

Table 4.3. Thermal comfort requirements, typical supply airflow rates and cooling loads for assembly shops of automotive plants.

Source of information	Location Latitude/ altitude	Outdoor reference conditions: Summer DBT/WBT Winter DBT	Occupied zone air temperature, °C			Air velocity, m/s (winter)		Outdoor airflow rate, $m^3/(h\ m^2)$			Net process equipment heat release, W/m^2
			Summer		Winter	Winter	Summer	Winter	Summer		
			Non-tempered air system	Tempered air systems					Non-tempered Air system	Tempered Air systems	
Scania [16]	Stockholm, SWE 59° 35'/ 11m	24.2/16.2 -15	27, when t_{out}<27 t_{out}+ 5, when t_{out}_27	-	19-21 20-22 – eng.assmbly.	0.25	-	8-10 10-12	20 20	-	-
Volvo [20]	Goteborg, SWE 57° 67'/ 169m	24/19 -16	t_{out} + 3	-	18-22	0.15-0.20	0.15-0.25	15-18	15-18	-	-
Toyota U.S.A. [17]	Georgetown, KY 38°18' /149m	32/24 -11.4	-	27	18	-	-	18.3	-	22	-
General Motors Corp. [23]	General info		t_{out} + 5	24	21	-	-	23-32	36.5-73	23-32	-
Ford Motor Co. [12]	General info		32	28	18-22	0.5	-	18	40	18	29
Daimler-Chrysler, AG [6]	Sindelfingen. GER 48° 68'/ 419m	27.3/18.3 -10	-	18-22				23		23	
FIAT [11] Middle Italy South Italy	43°48' /38m 40°55' /280m	34/24/-1 33/24/-3	-	- t_{out} = - 4	18 18	0.05 - 0.3		5.6 20/31	-	5.6 20/31	116/145 (total)
VDI 3802 [18]			See graph in Figure 4.1					20-30	20-30	20-30	25-45

Table 4.4. Thermal comfort requirements, typical supply airflow rates and cooling loads for paint shops of automotive plants.

Source of information	Location Latitude/ altitude	Outdoor reference conditions: Summer DBT/WBT Winter DBT	Occupied zone air temperature, ^oC			Air velocity, m/s (winter)		Outdoor airflow rate, $m^3/(h\ m^2)$			Net process equipment heat release, W/m^2
			Summer		Winter	Winter	Summer	Winter	Summer		
			Non-tempered air system	Tempered air systems					Non-tempered Air system	Tempered Air systems	
Volvo Cars [20] Inspection, grinding Touching-up	Goteborg, SWE 57° 67'/ 169m	24/19 -16	-	-	-			 30 50	-	 30 50	-
Toyota U.S.A. [17]	Georgetown, KY 38°18' /149m	32/24 -11.4	-			-	-	40	-	40	-
Ford Motor Co. [12]	General info		32	26	18-22	0.5	-	15 without process needs	-	-	28
John Richards [14] Phosphate pre-coat area Oven area Strip out area Paint shop level 1 Paint shop level 2	General Information		-	 26.7-29.5, 60% RH 26.7, 60% RH 26.7, 60% RH 26.7-29.5, 60% RH 35-40.5, 60% RH	 26.7-29.5, 60% RH 26.7, 60% RH 26.7, 60% RH 26.7-29.5, 60% RH 35-40.5, 60% RH	-	-	 47 47 28 18 28	-	 47 47 28 18 28	
FIAT [11] North Italy Middle Italy South Italy	 45° 04'/ 20m 43°48' /38m 40°55' /280m	 33/23.4/-5 34/24/-1 33/24/-3	-	t_{out} - 4	 18 18 18	 0.05 - 0.3	-	 31 10 -		 31 10 -	-

4.7. References

1. ACGIH. 1998. Industrial Ventilation. A Manual of Recommended Practice. 23 edition. American Conference of Government Industrial Hygienists. Cincinnati, OH.
2. ACGIH. 1998. Guide to Occupational Exposure Values – 1998. American Conference of Governmental Industrial Hygienists. Cincinnati, OH.
3. AFS 1996:2. 1996. Occupational Exposure Limit Values. The Swedish National Board of Occupational Safety and Health.
4. ASHRAE. 1997. ASHRAE Handbook. Fundamentals. American Society of Heating, Refrigerating and Air-Conditioning Engineers. Atlanta, GA.
5. ASHRAE. 1999. ASHRAE Handbook. HVAC Applications. American Society of Heating, Refrigerating and Air-Conditioning Engineers. Atlanta, GA.
6. DaimlerChrysler AG. 1999. DaimlerChrysler Werk, Sindelfingen. Private communications with Mr. Wolfgang Hera and Mr. J_rgen Schneider.
7. DaimlerChrysler. 1999. Kenosha Engine Plant. Private communications with Mr. Dave Mattox.
8. DGB. 2000. Industrial Ventilation Design Guidebook. Fundamentals. Academic Press.
9. GOST. 1988. GOST 12.1.005-88. General Requirements to the Occupied Zone Air. Moscow: GOSSTANDART.
10. GM. 1997. Facilities Common Systems' CD. General Motors Corporation. Worldwide Facilities Group.
11. FIAT Engineering. 1999. Air Systems Solutions for air-conditioning in automotive production buildings. Private communications with Mr. Piero Gauna and Mr. Donato Leo. Turin, October 1999.
12. Ford. 2000. Ford Motor Land Services, Koeln-Niehl. Private communications with Mr. Manfred Pack.
13. Holness, Gordon. 1998. World-Class Facilities, World-Class Timing.
14. Richards, John. 2000. Paint shop building ventilating and air conditioning. Proceedings of the 4th International Conference "Ventilation for Automotive Industry". June 19-21. Aachen, Germany.
15. SanPiN. 1996. SanPiN 2.2.4.548096. Hygiene requirements to microclimate in production halls. Moscow: Russia Ministry of Health.
16. Scania Partner AB. 1997. Private communications with Mr. Karl Pontenius.
17. Toyota. 1999. Toyota Motor Manufacturing, U.S.A., Inc. Private communications with Mr. Charles Martin.
18. VDI 3802. 1997. Air Conditioning Systems for Factories. VDI – Richtlinien. D_sseldorf: VDI.
19. VDI 2262. 1994. Workplace Air . Reduction of Exposure to Air Pollutants. Ventilation Technical Measures. Part 3. D_sseldorf: VDI.
20. Volvo. 1998. Celero Support AB. Private communications with Mr. Sten-Arne H_ kansson.
21. Volvo. 1997. Technical Specifications. HVAC systems for production halls. G_teborg 1997-09-01.
22. Williams, Steven. 1999. Plant ventilation with a ductless air supply – DaimlerChrysler Toledo Assembly Plant. Part 3. HVAC system analysis and design. Proceedings of the 2nd International Conference and Workshop "Ventilation for Automotive Industry". April 18-21. Detroit, MI.
23. Woody, Alfred. 1998. Ventilation Systems Applied to Automotive Manufacturing. Proceedings of the 1st International Conference and Workshop "Ventilation for Automotive Industry". September 7-9. Boken_ s, Sweden.

5. BODY SHOPS AND COMPONENT MANUFACTURING SHOPS WITH WELDING AND JOINING OPERATIONS.

5.1. Process description. Automotive component and assembly operations rely on welding as the dominant process for joining metal body components up to approximately 3 mm thick. Of the welding processes, resistance spot and seam welding are favored due to the repeatability, simplicity, ease of control, and low cost. These welding processes invariably produce some amount of surface and interfacial material expulsion. The expulsion is overemphasized by photographic techniques, however measurable amounts of expelled material are ever present as a result of normal welding operations. As a result, periodic cleaning of the tooling is required.

5.1.1. The materials used in body construction are now mostly coated steels and aluminum alloys. The low melting point of the coatings on the steel and welding characteristics of aluminum further increase the amount of material available to be ejected into the tooling and shop environment. Additionally, many of the weld joints are processed with adhesives and sealers, which decompose when, subjected to the heat of welding. These materials further add to environmental concerns in the shop.

5.1.2. Other high volume welding operations involve cutting and arc welding of metals in heavier gages associated with structural components such as frames and chassis components. These materials are difficult to form and require application of special forming lubricants that typically are not removed prior to welding. Gas Metal Arc Welding (GMAW or MIG welding) and Shielded Metal Arc Welding (SMAW /rod/stick) are typically used for welding these heavier gages. These welding processes rely on extremely high temperatures of the arc to heat the filler metals used for joining. Decomposition of the lubricants, coatings on the filler metals and atmosphere near the arc are additional environmental concerns in these operations. Major producers may process millions of pounds of welding filler metal each year on frame components.

5.1.3. Robotic welding is commonly used after the parts are initially prewelded. Automated fixtures are often manually loaded and provide only the necessary structural and dimensional control to allow automated welding and assembly operations. Automation and robotic welding is typically used when possible, to perform subsequent welding operations. Manual or stationary spot welding operations are used for small component assembly, low volume operations, and assemblies requiring special accessibility. With automation, the operator is thereby some distance from much of the fume of the welding operations.

5.1.4. Additional welding processes found in production include, laser beam, plasma welding and cutting, and drawn arc stud welding. Post-welding processes include metal finishing of the welded assemblies by grinding and polishing, application of sealers and surface cleaning prior to paint.

5.2. Types of contaminants. Production processes in bodyshop and shops with welding operations result in emission of:

- fumes and gases from welding and cutting operations,
- airborne metal particles,
- abrasive particles from grinding and polishing discs,
- burned oil fumes,
- fumes from heated sealant, and
- heat.

5.2.1. Welding fumes and gases. Welding fumes are solid particles originating from welding consumable, the base metal, and any coating present on the base metal. Gases are produced during the welding process or may be produced by the effects of process radiation on the surrounding environment. The quantities of these gases can be significant in some applications such as plasma arc cutting or high amperage welding of very reflective metals such as aluminum or stainless steel.

During resistance welding of overlapping sheets, welding fumes may form by expulsion or evaporation of the base material as well by electrode wear. During welding of coated sheets other foreign substances are generated in addition to the fumes. With resistance welding, the main portion of the fume is emitted from the sheet to be welded. The influence of electrode material on emission rate is negligible.

When *welding with expulsion* (splashing), the fume emission is significantly higher compared with the welding without expulsion (Krause et al., 1985). In welding with expulsion the fume emission rate is highest under short-time conditions compared to medium and long-time conditions.

Oil film on the metal surface increases the fume generation rate [15,17]. E.g., resistance welding of sheets covered with oil film 1.3 mg per cm^2 produces approximately 30% more fumes (0.15 mg/spot) compared to welding of clean metal [17]. Thickening of the oil film to 5.7 mg per cm^2 results in an increase of the fume emission to 0.65 mg/spot.

High temperatures involved in resistance or arc welding could result in *decomposition of sealant* used in some welded joints. Though the formulation of sealant used by different auto manufacturers may differ, the most common components of decomposition fumes are CO and CO_2. Other gases, which may be a concern if present in the decomposition vapors are: NO_x, HCl, HNO_3, SO_2, hydrogen sulfide, oxides of phosphorous, vinyl chloride, acetic acid, HCN, aromatic hydrocarbons, aliphatic hydrocarbons [9]. Some of these components may be toxic, but their concentration in the occupied zone air is typically below the National allowable limits (e.g., PEL, TLV, and MAK). However, the odors emitted by the decomposed fumes are commonly above the perceived levels and may cause workers complaints. Currently, no solid research data on emission rate and components of decomposition fumes are available.

Information about fume generation rate with resistance welding and laser welding/cutting is limited. The following data were received from VW [28] and Celero Support (Volvo Group) [27] companies:

- Fume generation per spot welds with spot resistance welding of galvanized sheets:
  1.42 mg/spot (Zn) - VW data,
  2.0 mg/spot (Zn) - Celero Support -Volvo Group Company data.
- Fume generation per meter of weld with a seam MIG/TIG welding (Celero Support -Volvo Group Company data):
  0.7g/meter – black sheets,
  2.0g/meter - galvanized sheets.
- Laser welding/cutting (Celero Support -Volvo Group Company data)**:**
  0.1 g/meter.

Welding fumes and gases produced with GMAW and SMAW welding are chemically very complex. Their amount and composition depend upon the composition of the filler metal and base material, welding process, current level, arc length, and other process factors. Awareness of these hazards is the first step in providing protection to the welder in the workplace.

Particle Size. Fume particle size is an important safety related variable as particle size determines the degree of penetration and retention in the human respiratory system. Researchers have determined that while fume size varies with process variables, welding fume is consistently in the sub-micron range, averaging about 0.3 microns for typical welding and thermal cutting processes, a size that will

easily penetrate the respiratory system. It should also be noted that these fine particles tend to agglomerate or form larger clusters, which can be retained in the lungs.

Specific Contaminants. Data on specific contaminant emissions produced by various welding processes are usually available from electrode manufacturers (MSDS sheets).

5.2.2. Shop heating from welding processes.

Each welding process will also add heat into the shop air and cooling water. Two welding processes make up the bulk of welding used for automotive production, (1) Resistance Spot Welding (RSW), (2) Fusion or arc welding. Designers should consult with the plants welding engineer to get actual welding schedules, and amounts of welding to be performed on each body. The following examples illustrate the magnitude of heating that would occur on an average for the conditions described.

Resistance welding processes are characterized by short heating impulses, which raise the temperature of the metals at spot locations typically about 6.5 mm in diameter. Heating of the process equipment also occurs due to resistance heating of the electrical conductors. The typical resistance welding process equipment uses water to cool the power controller, welding transformers, and welding gun. Water is necessary to transport the heat generated by the process out of the body shop and maintain stable conditions in the welding circuits. Water is circulated through a cooling system (often a evaporative type cooling tower) where the heat is removed, filtered to remove particulate, and is made ready for recirculating.

Resistance welding equipment first clamps the cool tips to the part, then applies welding current, and then allows the part to cool by maintaining the clamping against the cool copper weld tips. Typically, parts leaving the process are cooler than parts made with an arc welding process.

Some specialized resistance spot welding processes are air cooled. In this case virtually all of the process heat may end up in the body shop.

Arc welding produces more fume and heat into the shop than the resistance welding process. The process is characterized by much longer process times in which power is delivered to the parts being joined. Parts joined by this process typically leave the welding station at much higher temperatures than a resistance welded part.

The following rule of thumb can be used. The typical large auto body contains 4,000- 6,000 welds. Production rates can be as high as 95 bodies per hour for high volume production of popular models. It is necessary for the ventilation designer to determine how many welds of each type of process are being produced each hour for each body being produced. The necessary information can be obtained from the process and welding engineer. The following is for estimating heating of the shop air and should not be used for sizing the cooling water system.

Water cooled resistance welding. The typical water-cooled resistance spot-weld process - sheet metal welding:

- Delivers 1.05 BTU (1100 joules) per weld into the part;
- Leaves 0.115 BTU per weld in the steel to be dissipated in the shop air;
- Raises the temperature of one pound of steel 1.5 degrees F (0.8°C) - observed using 5-cycle hold time;

- About 11% of the heat delivered are retained in the part. (depending on post heat clamp time).

Example 1.
Assumptions: part resistance = 50 micro ohm, weld current 11.5 kA,
weld time t = 0.167 sec (10 cycles @ 60 HZ), welds per body = 4500, bodies/ hr = 60.
0.11BTU per weld X 4500 welds per body X 60 bodies per hour = 29700 BTU/h

Air-cooled resistance welding. The typical air cooled resistance spot weld process:

- Practically all heat 9.4 BTU per weld (weld and process equipment) goes into the body shop;
- Delivers 1.05 BTU (1100 joules) per weld into the part;
- Leaves 0.115 BTU in the steel to be dissipated in the shop air.

Example 2. For typical air-cooled resistance weld process - sheet metal welding.
Assumptions: total weld circuit has 450 micro ohm resistance, weld current 11.5 kA,
weld time t =0.167 sec (10 cycles @ 60 HZ), welds per body = 4500, bodies/ hr = 60.
9.4 BTU per weld. X 4500 welds per body X 60 bodies per hour = 2,538,000 BTU/h

Arc welding process. The typical robotically applied arc weld uses 6.3 Btu per inch (25.4 mm) of weld. Welded frames may contain 500 inches (12.7) or more of arc welds. Materials for estimating assume a mix of welding on 1.5 -3.0 mm carbon steel.

5.3. Target Levels

Threshold limit values (TLV) for fumes and gases produced by various welding operations by chemical type are listed by National Occupational Safety and Health Organizations. In the U.S.A., the American Conference of Governmental Industrial Hygienists publishes a guide "Threshold Limit Values for Chemical Substances and Physical Agents and Biological Exposure Indices", which is issued annually.

Permissible exposure limits (PEL) are regulatory and are published by the Occupational Safety and Health Administration (OSHA) [2]. OSHA's current standards for welding, cutting and brazing in general industry and construction are based on the 1967 American National Standards Institute (ANSI) standard Z49.1. While ANSI Z49.1 has been updated several times since 1967, the OSHA welding standards in subpart Q of part 1910 have not been updated to keep pace.

NIOSH published a Criteria Document "NIOSH Criteria for a Recommended Standard: Welding, Brazing, and Thermal Cutting," in 1988, recommending that "exposures to all welding emissions be reduced to the lowest feasible concentrations using state-of-the-art engineering controls and work practices" [22]. NIOSH has also recommended exposure limits for specific chemical and physical agents associated with welding.

Contaminants, which can be produced in welding and allied processes, are as follows. The metallic components are typically found in the form of oxides and/or fluorides.

Aluminum is found in alloys and filler metals and is produced as aluminum oxide in aluminum welding. It can be a respiratory irritant.

Barium may be found in some self-shielded flux-cored electrodes. Exposure to soluble barium compounds can cause irritation of the eyes, nose, throat and skin.
Cadmium occurs as a plating material or brazing alloy. It can be a serious hazard resulting in emphysema, kidney damage and pulmonary edema.
Carbon Monoxide in low concentrations results from the reaction of carbon dioxide and the welding arc in GMAW and FCAW welding. Symptoms include headaches, dizziness and mental confusion.
Chromium is an alloying element most commonly found in stainless steels and in some low alloy steels. It can cause skin irritation and increased risk of lung cancer.
Copper is used in some electrodes and in alloys. It may also be found as a coating material in some GMAW electrodes. Copper can cause respiratory irritation or metal fume fever.
Fluorine in the form of fluorides is used in some fluxes and electrode coatings and as a fill ingredient in some flux-cored electrodes. It can cause respiratory and eye irritation.
Iron in the form of iron oxide is the most common fume constituent. Iron oxide can be a respiratory irritant and can cause siderosis.
Lead is found in some coatings and in some brass, bronze and steel alloys. Lead can cause nervous system disorders, kidney damage and reproductive problems.
Manganese is used in most steel alloys and may be found at higher levels in some hardfacing electrodes. It can produce nervous system disorders, pneumonia and loss of muscle control.
Molybdenum is found in some steel alloys and can cause respiratory and eye irritation.
Nickel is present in stainless steels and nickel alloys. It can cause respiratory and skin irritation and metal fume fever.
Nitrogen Oxides consisting of nitric oxide and nitrogen dioxide are formed by the welding arc and are respiratory irritants.
Ozone is formed by the interaction of the welding arc and atmospheric oxygen. Ozone can irritate the eyes, nose and throat and can cause pulmonary edema.
Phosgene is a highly toxic gas, which is formed when the ultraviolet rays from the welding arc come in contact with chlorinated solvents, such as trichlorethylene. Inhalation of high concentrations of phosgene may produce pulmonary edema.
Silicon is present in most welding consumable in the metallic form, the oxide form, or both. Silicon dioxide is also a common ingredient in submerged arc welding fluxes and may be present in large quantities in the dust that is generated during flux handling. The crystalline forms of silica are responsible for producing silicosis.
Tin is used in some solder alloys and bronzes. Tin can cause metal fume fever.
Titanium is found in some stainless steels and titanium dioxide is a common ingredient in many flux-cored electrodes and SMAW electrode coatings. Titanium can produce respiratory irritation.
Vanadium is used in some steel alloys and in some electrode coatings. Vanadium can cause skin, eye and respiratory irritation, pneumonia, emphysema and pulmonary edema.
Zinc is found in galvanized steel and in paint coatings. It can cause metal fume fever.

Table 5.1. Current (1998) exposure limits for fumes and gases produced by various welding operations [2,3,10]

Substance	Germany	Russia	Sweden	U.S.A.		
	MAK mg/m^3	TLV mg/m^3	LLV mg/m^3	OSHA mg/m^3	ACGIH mg/m^3	NIOSH mg/m^3
Aluminum		2	2	-	5	5
Barium	0.5	0.5	0.5	0.5	0.5	0.5
Cadmium		0.01	0.01	0.005	0.002	-
Chromium		1	0.5	0.5	0.5	0.5
Copper	0.1	0.5	0.2	0.1	0.2	0.1
Dust, respirable	1.5		5	5	3	-
Fluorine	0.16	0.5	0.2	0.2	1.6	0.2
Iron	1.5	4	3.5	10	5	5
Lead	0.1	0.005	0.05	0.05	0.05	<0.1
Manganese	0.5	0.2	0.5	-	0.2	1
Nickel		0.05	0.5	1	1.5	0.015
Nitrogen Oxides	9.5	5	30	-	5.6	-
Ozone		0.1	0.2	0.2	0.16	
Phosgene	0.082	0.5	-	0.4	0.4	0.4
Silicon		4	-	5	10	5
Tin			-	2	2	2
Titanium	1.5	10	5	15	10	-
Vanadium	0.05	0.1	-	0.1	0.05	0.05
Zinc	5	0.5	1	5	5	5

5.4. Process related measures allowing the emission rates reduction.

1. Avoid or reduce oil film on the welded surfaces [15,17];
2. Use rectangular wave high frequency pulse GMAW machines to reduce fume generation. Results of tests conducted at John Deere in 1992 indicate, that pulse GMAW welding allows for fume reduction by ~80% compared to the constant voltage GMAW on clean parts and by ~60% on oily parts [15];
3. Reduce expulsion with spot welding [17];

4. Avoid short-time conditions with spot welding, changing over to medium-time conditions [17]. 1985);
5. Place containers with welded small parts in the totally enclosed cabinets connected to exhaust system to avoid residual welding smoke release into the building (Figure 5.1) (Fiat, Turin).

5.5. Ventilation

5.5.1. Principles of Ventilation

Clean air for welding operations is provided by ventilation systems, which typically consist of local exhaust systems and general ventilation supply and exhaust systems. The most efficient methods of contaminant control in the occupied zone of the welding shop, and particularly in the breathing zone of the operator or welder (with a manual welding), are:

- exhaust from the total welding process enclosure when automatic welding machines are used (Figure 5.2);
- exhaust from the welding area enclosure, when robotic welding and material handling are used (Figure 5.3), and
- local exhaust which captures the contaminants at or near their source.

Exhaust from enclosures separating welding process from the operator's environment, or local exhaust systems with manual and semiautomatic welding operations are normally the most cost-effective solutions to fume control. They minimize the required outdoor airflow rate thus optimizing system installation and operating costs especially where filtered air return back into the building is not used. Control of fumes in the source area can also reduce plant maintenance costs. A cleaner workplace may also lead to an in increase in employee productivity.

No local exhaust ventilation system is 100% effective in capturing fumes. However, it is important to note that capture efficiency has a greater influence on air quality than filtration efficiency. No filter device is effective until the fume is drawn into it. In addition, there will be circumstances, because of the size or mobility of the welding zone, where installation of local exhaust ventilation systems may not be possible. Also, local exhausts are typically not efficient in removing fumes generated after welding at the heat-affected zone.

General ventilation is needed to dilute pollutants not captured by the local ventilation system and to dilute fumes generated after welding. General ventilation systems supply make-up air to replace air extracted by local and general exhaust systems. Also, supply air is used to heat and cool the building. Volume of outside air to be supplied by a general ventilation system should exceed the volume of air exhausted by local ventilation systems. Buildings should be pressurized to prevent air infiltration creating cold drafts in winter, and hot humid air in summer. In addition to local exhaust system, a general exhaust system is used to evacuate air from the building.

Special attention should be paid to ventilation of areas with grinding and polishing operations. Especially, in the case with aluminum production. Air supply and exhaust should be arranged such to create low velocity-low turbulent airflow preventing dust dispersion in the shop (Figure 5.2.) Low airflow, high vacuum exhaust systems built-in grinding and polishing machines significantly reduce contaminant load on the building.

5.5.2. Local Exhaust Ventilation

Total (or complete) enclosure is a box or housing mounted around or built into the welding machine (Figure 5.3). The enclosure is not intended to be air tight. Limited openings might be required by the process needs. They also provide a path for replacement air to enter.

Robotic welding areas or a part of conveyor with welding operations can be enclosed using a large canopy hood with a perimeter plastic curtain (Figure 5.4). The size and design of the hood should limit free area to reduce exhausted airflow rate. Location and size of the openings should allow components entrance to and exit from the welding area. Similar enclosures can be used to contain and direct residual emissions in the part of conveyor transporting welded parts from automated welding machines. (Figure 5.5).

The enclosure is kept under negative pressure by the exhaust system connected to the hood. The exhaust airflow rate must be sufficient to prevent contaminants from escaping from the enclosure. According to BEI and the DaimlerChrysler Process Group, a control velocity of 0.5 to 0.75 m/s would be required in the openings and in the slot between the plastic curtain and the floor [30].

Local exhaust systems for manual and semiautomatic welding processes capture air contaminants close to their source. These systems will only be effective if they are correctly designed, installed, maintained, and used. The exhaust airflow through hoods should maintain capture velocity at the point of fume generation between 0.5 and 0.75 m/s [6].

Stationary, mobile or portable local exhaust ventilation systems may consist of the following basic elements: capture hood, duct system, air-cleaning device, fan, and outlet discharge ductwork. These elements must be specifically engineered for each application. They must remove fume while not disturbing the welding process. For example the fume capture velocity at the weld zone must not disturb the shielding gas.

Effective control of worker exposure to dusts from polishing and grinding operations on can be achieved by use of polishing and grinding equipment with a built-in high velocity, low volume local exhaust ventilation as part of the tool's design.

The choice of local ventilation system type depends on the method and conditions of welding, type of welding equipment, size of the welded components and shop space factors. Typical systems are shown in Table 5.2.

Table 5.2. Local Ventilation Systems for Welding and Cutting Processes [32]

System Type	Typical Airflow	Comments	Reference
Welding gun with integral fume extraction	30-60 CFM (50-100 m3/hr)	Extracts fume at the weld zone through GMAW and GTAW guns	Figure 5.6
High vacuum source capture nozzle	90-180 CFM (150-300 m3/hr)	Captures fume through high velocity, low volume extraction nozzles. Usually positioned by the welder with arc welding or attached to electrodes of suspended and stationary spot welding machines.	Figure 5.7
Flexible fume extraction arm	560-860 CFM (900-1400 m3/hr)	Draws higher air volume and is easily positioned and repositioned by the welder.	Figure 5.8.
Cross draft welding table (slotted hood)	180-280 CFM per ft2 (3300-5000 m^3/hr per m^2)	Excellent for controlling fume in a fixed location serving small part welding	Figure 5.9.
Fixed canopy hood	Varies with hood height and space	For robotics arc and resistance welding operations. Size and airflow rate depends upon the size of the welding zone. Should be supplied with solid (plastic) curtains when possible to prevent the influence of room air movement	Figure 5.10 Figure 5.11 Figure 5.12
Push-pull overhead hood	Varies with hood height and space	For robotics arc and resistance welding operations. An engineered design to reduce exhaust air volume in a large, fixed welding zone.	Figure 5.13
Downdraft cutting table	150 CFM per ft2 (2700 m3/hr per m2)	Used in large, fixed, flat plane operations (e.g., plasma cutting)	Figure 5.14.
Built-in fixture exhaust system	90-180 CFM (150-300 m3/hr) per welding point	For repetitive arc and resistance manual and robotics welding operations. An engineered design to reduce exhaust air volume, increase capture effectiveness of fumes generated during and after welding operations. Requires co-operation of process and ventilation engineers.	Figure 5.15.

Notes:

- Individual hoods can be connected to a single fan or multiple hoods can be connected to collection / fan exhaust system.
- Flexible extraction arms can also be incorporated into a mobile or hanging unit with a built in filter and fan. The type of support mechanism and hose length may allow a lateral positioning radius of up to 9 m at heights of up to 5.5 m above the floor.
- The push-pull hood over a welding robot is an alternative to a gun mounted extractor or a large canopy hood over the welding area. To reduce the amount of exhaust and replacement air the push-pull hood combines filtered air return and slot diffusers to create an air curtain around the welding area. An air cleaner is recommended to allow partial recirculation.

5.5.3. General Ventilation (see chapters 9, 10, 11**)**

5.5.4. Fume Filtration

5.5.4.1. Collector Selection. Often when air is exhausted, it is exhausted through a fume/dust collector. These collectors may be:

- small, portable collectors connected to the local exhaust and the fan;
- medium size wall- or floor-mounted collectors working as part of the local exhaust system with one or few exhaust hoods, or
- large collectors that may work with either a centralized local exhaust system or with a general exhaust system.

It should be noted that most of collectors used in welding shops are designed to remove solid matter (fume) only and not gases. It is not cost efficient to use collectors capable of efficient removal of gaseous byproducts.

Collectors are selected based on the following factors:

1. Contaminant Concentration. The amount of dust and fume generated by the process.
2. Efficiency Requirements. Capture efficiency generally has greater influence on air quality than filtration efficiency. However, the filtration efficiency required must be sufficient to meet all national and local codes and standards (OSHA, EPA, etc.). HEPA filters are those classified with an initial efficiency of 99.97% at 0.3 micron (DOP test) but are not typically required in most welding applications.
3. Contaminant Characteristics. These include contaminant size and condition such as wet, dry or sticky.
4. Energy Consumption. All collectors consume energy in order to overcome pressure drop through the collector. The pressure drop is measured in Pa (inches of water). Energy is also consumed during the cleaning of contaminant from collectors.
5. Maintenance costs. Some collectors can be cleaned on-line, others require cleaning or replacement of filtration elements.

There are two major types of collectors used in welding fume control.

1. Cartridge Collectors,
2. Electrostatic Precipitators

5.5.4.2. Cartridge Collectors (Figure 5.16)**.** Cartridge collectors use filters made out of pleated paper or synthetic filter media. This type of cartridge results in a much larger amount of filter media per collector volume than media used in conventional fabric filters. In addition, the type of filter media used in these cartridges is usually much more efficient on sub-micron sized particulate with filtration efficiencies exceeding 99%. It should be noted that while cartridge filters are generally more efficient on sub-micron sized particles, performance depends on the filter media used in the cartridge itself. All cartridges have a similar appearance regardless of efficiency. Specifications should define the filtration efficiency of the unit on sub-micron sized particles.

Cartridge collectors are relatively easy to maintain. Maintenance involves replacement of the non cleanable cartridge when pressure drop significantly decreases fume capture. Non cleanable cartridges are normally used in small portable collectors.

Many cartridge collectors are cleaned on line, using a reverse pulse of compressed air. Cartridge life is

usually quite long on welding fume applications with a cleanable cartridge change required approximately once per year. Cartridge life can vary significantly with the application and type of media used. Most cartridges are relatively compact, easy to handle, and often can be changed from outside the collector.
Disadvantages of cartridges include a relatively higher pressure drop (500 to 1000 Pa) than an electrostatic precipitator (an inch or less) and the requirement for compressed air for cleaning. Filter life may be reduced if the welding fume is very oily. Special measures should be considered to protect cartridges from burning.

5.5.4.3. Electrostatic Precipitators (Figure 5.17). Electrostatic precipitators operate by electrically charging dust and fume particles and collecting the charged particles on oppositely charged collector plates. This type of filtration has been used for many years on welding fume because it is effective on small, sub-micron sized particles. Also, the pressure drop through this type of collector is usually the lowest of the available options, allowing reduced horsepower blowers. Finally, unlike the other collector options, there is no filter to replace.

Disadvantages include the requirement for frequent maintenance. The collection plates must be cleaned frequently to maintain filtration efficiency and remove collected contaminant. The plates can be cleaned manually, by mechanical shaking, or with a water wash. In addition, these units are not well suited for collecting high concentrations of dust and fume. As particulate is collected, filter efficiency is reduced.
Filtration efficiency varies from 90% to 99% on sub-micron sized particles.

5.5.5. Fire and explosion protection for exhaust systems

Welding exhaust systems by their nature have the capability to capture sparks that can be transported to the welding fume collector and starting a fire. There are many documented cases in the automotive industry where welding exhaust sparks have started fires in the duct and dust collectors. Fire protection systems need to be evaluated for each application. Local and national codes should be used as a basis of the design of the fire protection system. The local fire protection authority should be contacted for concurrence with the design and type of fire protection system(s) used.

The types of fire protection systems are water and gas (typically CO_2) with an automatic and/or manual discharge system. Consideration should be given to providing a drop out chamber for the welding process dust particles and sparks. This drop out chamber should be located as close to the welding process as possible. See the latest edition of the ACGIH *Industrial Ventilation Manual* [1] for guidance.

Some plants require that welding fume exhaust duct have fire sprinklers located from the welding hood to the drop out chamber. If the duct has fire protection sprinklers installed the static pressure should be adjusted accordingly. Some fire codes allow ducts less than 100 square inches to not have fire protection sprinklers installed. If the exhaust duct has fire protection sprinklers care should be taken to avoid water draining from the duct on to the welding robots or machinery. The ducts should be sloped to a drain, with a trap, discharging where the water will be less of a problem. The welding fume collector should have fire protection system installed. This is typically done with an automatic and/or manual fire protection system.

In cases of welding processes using materials that have the potential of forming explosive dust particles (such as aluminum, magnesium, etc.), great care must be used in providing the fire protection system. Consideration must be given to providing some sort of explosion pressure relief (blow out panels etc.) for the duct work, drop out chamber, welding fume collector, and any other locations where the potentially explosive dust can accumulate.

5.5.6. Explosion protection with aluminum grinding and polishing operations.

Very precise guidelines and precautionary measures must be applied for the grinding and polishing of aluminum in body shops. If they are not taken into account, there is a risk of an aluminum-dust explosion. The goal is to prevent the accumulation of particles in the complete system in order to avoid the risk of an explosion. To better understand the danger of dust-explosions and to avoid them it is very important to be aware of the three conditions under which such an explosion can occur.

These conditions are shown in the picture below:

If only one of the three conditions is not realized, an explosion cannot occur.

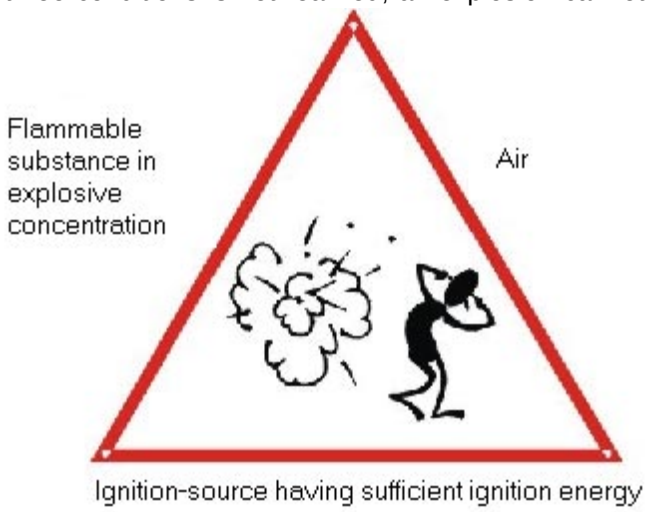

Aluminum dust (the flammable substance) will definitely be present as well as air-oxygen. The only preventive measure is to avoid an ignition source. Possible ignition sources can be:

- Hot surfaces
- Spontaneous combustion
- Sparks
- Electrical machinery
- Chemical electricity
- Static electricity
- Lightning.

The next step to avoid an explosion is to keep the concentration of aluminum powder as low as possible. A good ventilation system is therefore required. To prevent the dust from expanding in large production halls, the process of grinding/polishing should be performed in a booth. (Figure 5.18.)

Most of the aluminum-particles should be directly extracted from around the grinding machine to prevent their spreading in the cubicle. In fact, the exhaust built-in machine will not extract a high percentage of the particles. Therefore the ventilation of the cubicle should assure the removal of the remaining aluminum-particles.

The airflow exhausted from the cubicle should always exceed the airflow supplied into the booth. This controls the aluminum dust within the booth and prevents its dispersion into the shop. A pressure inside the cubicle should be always lower than in shop.

The air exhausted from the booth requires cleaning by either dry collection systems or wet collection systems. These cleaning methods have the following disadvantages:

Dry collection systems:

- Danger of explosion in dust collector;
  The nesessary explosion suppression is expensive.

Wet collection system:

- H_2 – generation:
  $2Al + 3H_2O \ddagger Al_2O_3 + 3H_2$
- Reaction after separation;
- Aluminum gets stuck in pipes.

The most important issue is to prevent an explosion. To accomplish this goal, the wet collection systems are the best solution. As soon as aluminum is in contact with water, the risk of an explosion is reduced. It is important, that such wet collection systems are designed to prevent accumulation of explosive hydrogen gas. Due to disadvantages of wet collection systems, dry collection systems should also be considered.

The Aluminum Association recommends [5] that the following guidelines apply to both wet and dry collection systems:

- Dust collection equipment and ducts should be of non-sparking rust-proof material.
- Each dust producing machine should have its own dedicated dust collection system.
- Ducts should be as short and straight as possible.
- The entire system should be grounded in accordance with [21] to prevent the accumulation of static electricity.
- The minimum conveying air flow velocity should be 4500 feet per minute.
- The maximum concentration of aluminum fines in the duct work should be kept below the lower explosive limit for the aluminum dust being conveyed.

In both wet and dry collection systems, ducts should have smooth interior surfaces with internal lap joints facing the direction of the airflow. The system should be designed to prevent the accumulation of dust [20]. Additionally the sludge or fines should be removed from both systems at least once a day.

Dry dust collectors should be located outside the building and provided with deflagration relief venting [20]. Venting should be to a safe area. To prevent the possibility of flashback down the inlet duct a method of explosion isolation in the inlet duct should also be installed. An example of a suitable mechanical isolation device is a high-speed deflagration isolation valve triggered by a deflagration within the dust collector. Because of the danger of flashback, recycling of air back into the building is prohibited [20].

The Aluminum Association recommends that high efficiency cyclone collectors be used instead of media type collectors [5]. If media type collectors are used they should be conductive to prevent the build-up of static electricity [20].

Wet type dust collection systems present a hydrogen gas explosion hazard. Therefore the sump within these systems should be ventilated at all times to prevent hydrogen gas accumulation [20].

5.6 References

1. ACGIH. 1998. Industrial Ventilation. A Manual of Recommended Practice. 23 edition. American Conference of Government Industrial Hygienists. Cincinnati, OH.
2. ACGIH. 1998. Guide to Occupational Exposure Values – 1998. American Conference of Governmental Industrial Hygienists. Cincinnati, OH.
3. AFS 1996:2. 1996. Occupational Exposure Limit Values. The Swedish National Board of Occupational Safety and Health.
4. AIHA. 1984. Welding Health and Safety. Resource Manual. American Industrial Hygiene Association. Akron, OH.
5. Aluminum Association, 1992. F1 - Guidelines for Handling Aluminum Fines Generated During Various Aluminum Fabricating operations. Washington, DC.
6. ASHRAE. 1999. ASHRAE Handbook. HVAC Applications. American Society of Heating, Refrigerating and Air-Conditioning Engineers. Atlanta, GA.
7. AWS. 2001. Ventilation Guide for Weld Fume. American Welding Society. Miami, FL.
8. AWS. 1979. Fumes and Gases in the Welding Environment. A Research Report on Fumes and Gases Generated During Welding Operations. AWS. Miami, FL.
9. Cemedine. 1999. Private communications with Dr. Rick Snyder - R&D director Cemedine, U.S.A., Inc. February 25, 1999.
10. GOST. 1988. General Requirements to the Occupied Zone Air. GOST 12.1.005-88. Moscow.
11. HMSO. 1990. Assessment of exposure to fume from welding and allied processes. Guidance note EN-54 from Health and Safety Executive. March. UK.
12. HMSO. 1990. The control of exposure to fume from welding, brazing and similar processes. Guidance Note EN-55 from Health and Safety Executive. April. UK.
13. Industrial Ventilation - 70 Examples. 1987. Bengsson-Back. Arbetarskyddnamanden. Stockholm (In Swedish).
14. INRS. 1990. Guide for Ventilation Practice #7 - ED 668. Arc welding operations. INRS. Paris (In French).
15. John Deere. 1998. Private communications with Bruce Davis and Davis Trees.
16. Kötting, G und G. Schmid. Widerstandspunktschweißen geklebter und beschteter Karosseriebleche: Verbindungseigenschaften, Technologie und Gefahrstoffemission. DVS 165.
17. Krause, H-J. and H. Press. 1985. Measurement of the welding fumes quantities and analysis of the fume composition during resistance welding. Report published by the Sub-Department

Joining Techniques of the Federal Institute for Materials Testing. Germany.

18. Mercedes-Benz U.S. International, Inc. 1999. Private communications with Mr. Richard Burnis. Tuscaloosa, AL.
19. Naherne, G. 1993. Presentation at the AWS symposium, May, New Orleans. Data from Welding Institute of Canada, Oakville, Ont.
20. NFPA. 1998. NFPA 651 Standard for the Machining and Finishing of Aluminum and the Production and Handling of Aluminum Powders. National Fire Protection Association. Quincy, MA.
21. NFPA. 1993. NFPA 77 Recommended Practice on Static Electricity. National Fire Protection Association, Quincy, MA.
22. NIOSH. 1998. Recommended industrial ventilation guidelines. NIOSH technical information. U.S. Department of Health, Education and Welfare. January.
23. Plymovent. 1998. Clean Fresh Air. Consultants Handbook. Industrial Products. Sweden: Plymovent AB.
24. U.S. EPA. 1991. Developments of Environmental Release Estimates for Welding Operations. Report on the project (contract no. 68-C9-0036, work assignment. no. 2-54, JTN 803812-16-2). IT Corporation. Cincinnati, OH.
25. US Patent. 1998. Device for removal of deleterious impurities from room atmosphere. U.S. Patent # 5,716,268. February 1998.
26. VDI 2084. 1993. Raumlufttechnische Anlagen fur Schweißwerkstatten (Ventilation systems for welding shops). Verein Deutscher Ingenieure, Dusseldorf. (In German).
27. Volvo. 1998. Celero Support AB. Private communications with Mr. Sten-Arne H@kansson.
28. VW. 1998. Private communications with Mr. Ulli Rudat.
29. Welders aren't made of steel. Thoughts and ideas for improved working conditions. 1990. Swedish Work Environment Fund, Stockholm.
30. Zhivov, A. and J. Dolfi. 2000. Body shop ventilation design. Proceedings of the 3rd International Conference “Ventilation for Automotive Industry”. March 13-15. Sao Paulo, Brazil.
31. Zhivov, A.M. and J.T. Ashe. 1997. Principles of Welding Fume Control. Proceedings of the International Symposium "Ventilation '97". September 14-17, 1997. Ottawa, Canada.
32. Zhivov, A.M. 1990. Variable air volume systems for industrial spaces. ASHRAE Transactions. Vol. 96(2). Atlanta, GA.

Appendix 5.1. Fume Generation Data

Product Type	Shielding Gas	Diameter	Amperage (A)	Voltage (V)	Fume Generation Rate (g/min)	Weight % Converted to Fume
Low hydrogen SMAW (EX018)	--	5/32"	175 - 180	21 - 22	0.4	0.9 - 1.2
Low Hydrogen SMAW (EX018)	--	1/8"	135	24 - 25	0.4	1.5 - 1.6
E6013	--	5/32"	165	33	0.4 - .05	1.1
E7024	--	5/32"	200	33	0.6 - 0.7	1.0
300 Series Stainless SMAW (E3XX-16)	--	1/8"	105	25	0.1	0.3 - 0.4
Flux-Cored Stainless (E3XXT1-1,-4)	Ar/25%CO_2	0.045"	200	27	0.4 - 0.5	0.5 - 0.6
E70T-5	CO_2	0.093"	500	37	3.5 - 4.0	1.8 - 2.0
E70T-5	Ar/25%CO_2	0.093"	500	37	3.5 - 4.0	1.8 - 2.0
First Generation FCAW (E7lT-1)	CO_2	1/16"	300	28	1.0	1.4
Second Generation FCAW (E71T-1)	CO_2	1/16"	300	28	0.7	1.0
First Generation FCAW (E71T-1)	Ar/25%CO_2	0.052"	220	24	0.7 - 0.8	
Second Generation FCAW (E7lT-1)	Ar/25%CO_2	0.052"	220	24	0.4 - 0.5	
Third Generation FCAW (E71T-1)	Ar/10%CO_2	0.045"	280	28	0.3 - 0.4	
Third Generation FCAW (E7lT-1)	Ar/10%CO_2	1/16"	340	29	0.3 - 0.5	
First Generation Metal Core (E70C-XM)	Ar/25%CO_2	0.045"	270	28	1.1	1.1 - 1.2
Second Generation Metal Core (E70C-XM)	Ar/25%CO_2	0.045"	270	28	0.6	0.6 - 0.7
Solid Wire - ER70S-3	CO_2	0.045	270-300	29	0.6-0.8	0.8
	AR/10% CO_2	0.045	280 -310	28	0.4-.5	0.5
	AR/5%O_2	0.045	280-310	28	0.2-0.3	0.3

Note: Because of rapidly developing formulation and manufacturing technology for flux and metal-cored wires, there are several generations of similar products in the marketplace. First generation represents original formulations and technology - products 5-10 years old. Third generation represents products released for sale in the last two years. See manufacturers information to determine an accurate product classification. Data provided by Praxair, Inc., Tarrytown, NY

Appendix 5.2. Fume Constituent Concentration Data (%)

AWS Class Electrode	Fe	Mn	Si	Ni	Cu	Cr	Mo	Al	Mg	F
Covered Electrodes										
E6010	41.6-49.6	3.0-3.4	3.7-5.7	--	--	--	--	--	--	--
E6013	45.0-62.2	4.1-5.5	11.2-15.0	--	--	--	--	--	--	--
E7018	24.2-28.7	3.6-4.5	1.1-1.7	--	--	--	--	--	--	13.1-15.0
E7024	29.5-33.3	5.3-7.8	13.2-18.3	--	--	--	--	--	--	--
E8018-C3	45.2	7.2	--	0.3	--	0.1	0.1	--	--	35.8
9018 B3	21.9	5.9	--	0.1	--	1.6	0.1	--	--	28.1
E316-15	8.4	7.7	--	1.1	--	5.8	0.1	--	--	--
E316-16	10.0	8.8	--	1.5	--	6.5	0.1	--	--	17.2
E410-16	33.1	5.2	--	0.1	--	--	--	--	--	--
ENi-Cl	2.5	0.3	--	6.9	0.1	--	--	--	--	10.0
Eni Cu-2	0.1	2.1	--	4.2	6.2	--	--	--	--	--
Flux Cored Electrodes										
E70T-1	25.2-46.1	6.2-13.5	1.0-7.5	--	--	--	--	--	--	.06-8.68
E70T-4	11.5-16.2	1.0-4.6	.05	.01	--	--	--	--	--	0.84-2.73
E70T-5	26.7-29.2	10.9-11.3	.05-.09	--	--	--	--	--	--	2.63-4.80
316L	12.4	7.3	.05	1.06		12.5	0.34	-	-	11.5
Gas Metal Arc Electrodes										
ER70S-3	55.4-65.7	5.5-8.5	.05-2.5--	--	.07-1.20	--	--	--	--	--
ER-5356	--	--	--	--	--	--	--	38.0	3.8	
ER Ni Cu-7	5.0	1.1	0.65	22.1	44.4	.01	--	--	--	--

Note: Data is from Fumes and Gases in the Welding Environment, American Welding Society, Miami, Fl.

Appendix 5.3. Fume Generated per amount of Electrode Used (lb fume per 100lb electrode consumed)

Electrode Class	Type of Electrode	Ratio
E70S-3	Solid Electrode	0.86
E70S-6	Solid Electrode	0.79
E308LSi	Solid Electrode	0.54
E70T-1	Flux-cored electrode	0.87
E71T-1	Flux-cored electrode	1.20
E6010(A)	Manual electrode	2.27
E6010(B)	Manual electrode	2.05
E6011	Manual electrode	3.84
E6013	Manual electrode	1.36
E308-16	Manual electrode	0.64
E7018	Manual electrode	1.57

Metal Concentration in Fume of Commonly Used Electrodes (percent of total fume)

Electrode Class	Aluminum	Barium	Chromium	Cobalt	Copper	Manganese	Nickel	Vanadium	Zinc
E70S-3	0.069	0.011	0.020	0.0017	0.65	6.7	0.0072	0.00076	0.094
E70S-6	0.060	0.0030	0.015	0.0029	0.44	10.4	0.014	0.00099	0.078
E308LSi	0.077	0.0014	6.0	0.0071	0.50	6.4	3.4	0.012	0.042
E70T-1	0.11	0.0018	0.013	0.0022	0.016	9.0	0.0058	0.0045	0.065
E71T-1	0.042	0.0026	0.014	0.0029	0.048	8.1	0.0040	0.0057	0.086
E6010(A)	0.043	0.0012	0.018	0.0023	0.26	3.9	0.026	0.0031	0.022
E6010(B)	0.018	0.00088	0.011	0.0035	0.033	4.4	0.0080	0.0023	0.036
E6011	0.016	0.0012	0.012	0.0025	0.014	2.6	0.014	0.0038	0.016
E6013	0.18	0.00097	0.030	0.0030	0.16	4.1	0.018	0.012	12
E308-16	0.78	0.0062	6.2	0.0078	0.10	3.8	0.82	0.019	0.087
E7018	1.3	0.042	0.024	0.0016	0.072	3.9	0.012	0.00070	0.12

Average Chemical-Specific Emission Factors (Fume) (lbs. of metal in fume per ton of electrode consumed)

Electrode Class	Aluminum	Barium	Chromium	Cobalt	Copper	Manganese	Nickel	Vanadium	Zinc
E70S-3	0.012	0.0019	0.0034	0.00029	0.11	1.2	0.0012	0.0013	0.016
E70S-6	0.0094	0.00047	0.0023	0.00045	0.069	1.6	0.0022	0.00015	0.012
E308LSi	0.0083	0.00015	0.65	0.00077	0.054	0.69	0.37	0.0013	0.0045
E70T-1	0.019	0.00034	0.0022	0.00038	0.0028	1.56	0.0010	0.00077	0.011
E71T-1	0.010	0.00062	0.0034	0.00070	0.0012	1.9	0.00096	0.0014	0.021
E6010(A)	0.020	0.00054	0.0082	0.0010	0.12	1.8	0.012	0.0014	0.010
E6010(B)	0.0074	0.00036	0.0045	0.0014	0.014	1.8	0.0033	0.00094	0.015
E6011	0.012	0.00092	0.0092	0.0019	0.011	2.0	0.011	0.0029	0.012
E6013	0.049	0.00026	0.0082	0.00082	0.044	1.1	0.0049	0.0033	3.3
E308-16	0.10	0.00079	0.79	0.0010	0.013	0.49	0.10	0.0024	0.011
E7018	0.41	0.013	0.0075	0.00050	0.023	1.2	0.0038	0.00022	0.038

Note: Data is from the report on "Development of Environmental Release Estimates for Welding Operations", Contract No. 68-C9-0036 Work Assignment No. 2-54 JTN 803812-16-2. U.S. EPA, Cincinnati, OH 45268

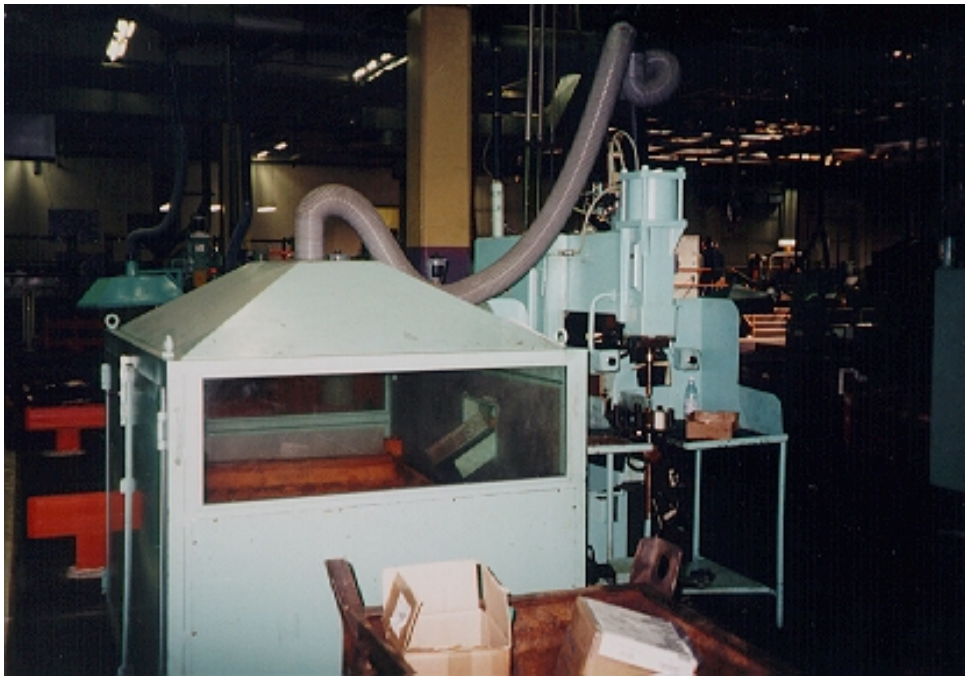

Figure 5.1. Enclosure over a containers with welded small parts at Fiat plant in Turin, Italy. Exhaust from the enclosure controls residual weld fumes.

a

b

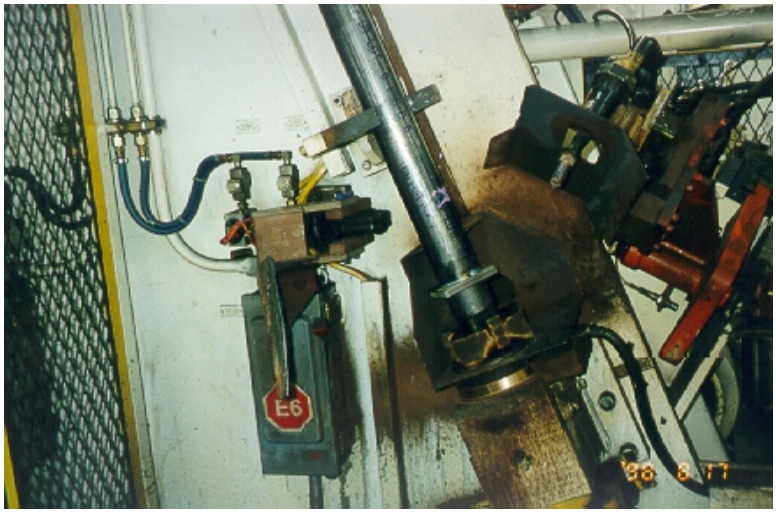

c

Figure 5.2. Exhaust built-in automatic axle welding machine at American Axel and Manufacturing Plant in Detroit, Michigan: **a** - general view of the automatic welding machine with two welding positions; **b** - local exhaust with a operable total enclosure and an automatic SGAW gun; **c** - duct system evacuating weld fumes from welding stations outside the building.

a

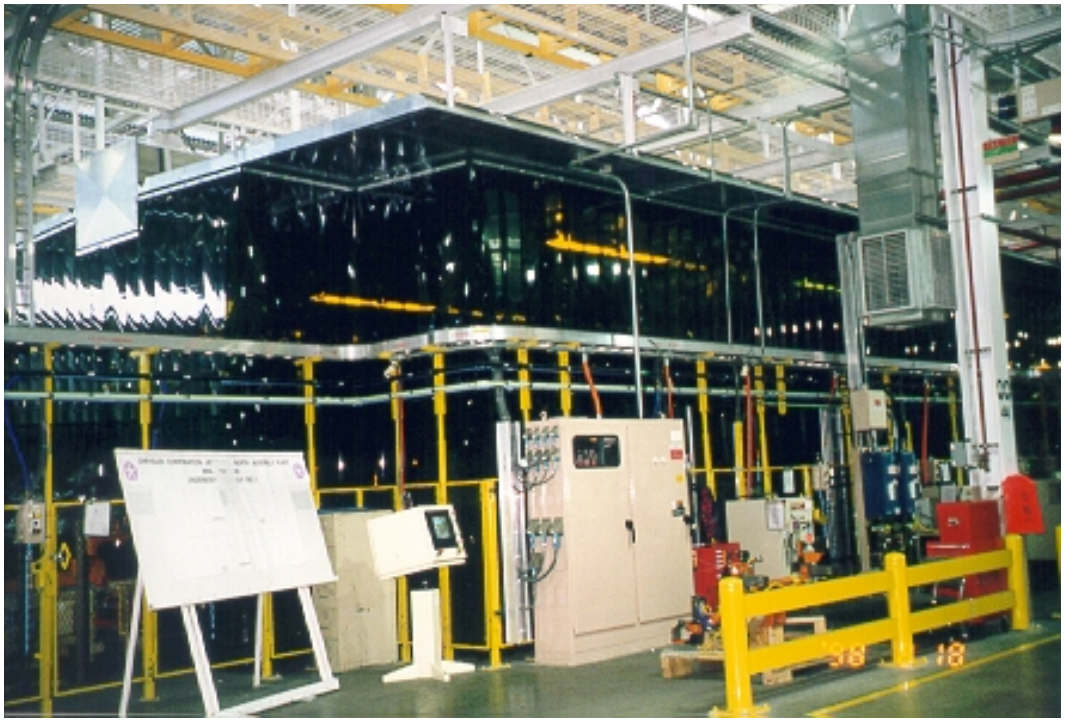

b

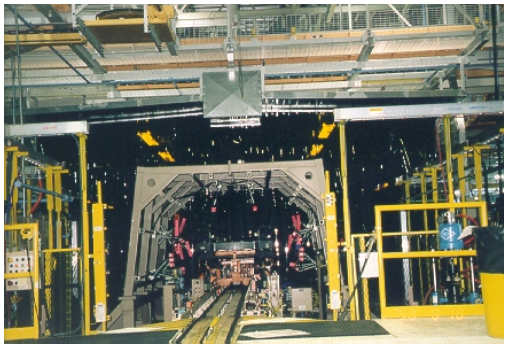

c

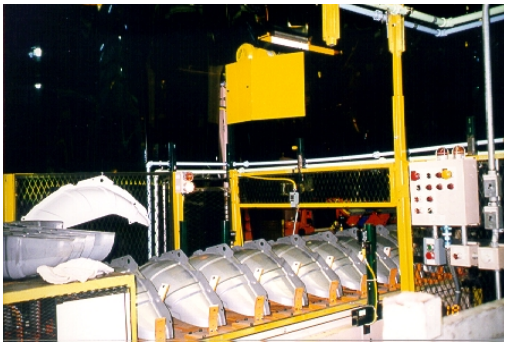

Figure 5. 3. Canopy hood with an air curtain enclosing part of the conveyor with a robotic spot welding area of the body shop at the Chrysler North Jefferson Assembly Plant: a - general view; b - welded parts exit from the enclosure; c - components entrance into the enclosure.

Figure 5.4. Unidirectional flow ventilation for the polishing and grinding operations at the DaimlerChrysler body shop in Sindelfingen. Air is supplied through special panels with low velocity and low turbulence and is extracted through square opening in the floor with a grating cover. Two workplaces located on each side of the car body are separated by the plastic curtain to prevent cross-contamination.

Figure 5.5. An overhead hood with a perimeter plastic curtain above the conveyor transporting welded parts from automated welding machines at the American Axel and Manufacturing plant in Detroit, Michigan. The exhaust from the enclosure evacuates residual welding fumes. Each welding machine has a separate canopy hood to control fumes during the welding process.

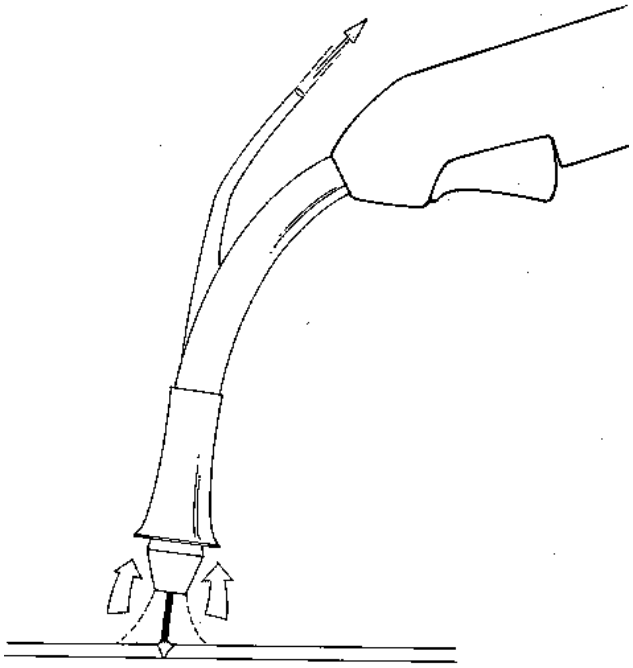

Figure 5.6. GMAW gun with a built-in exhaust.

a

b

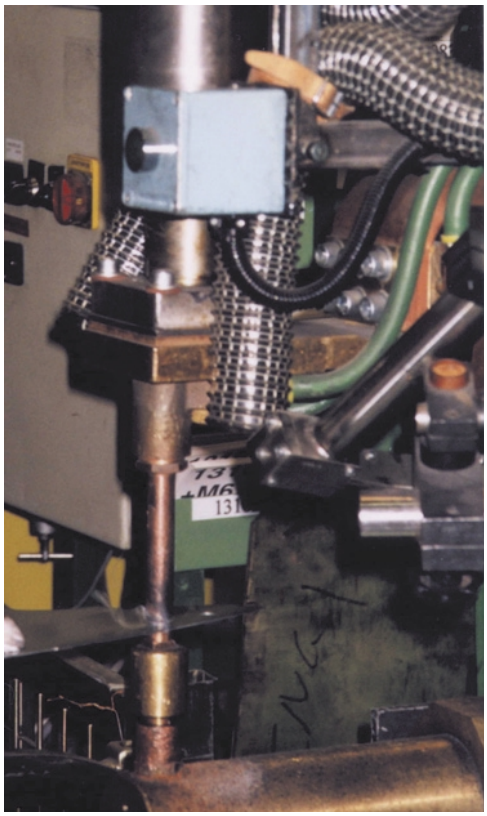

c

Figure 5.7. High vacuum low airflow fume extraction systems attached to spot welding machines: **a** and **b** - pedestal welding machines at the Scania Truck plant in Sodertalje, Sweden; **c** - suspended welding machines at the Ford Werke in Koeln-Neihl, Germany.

a

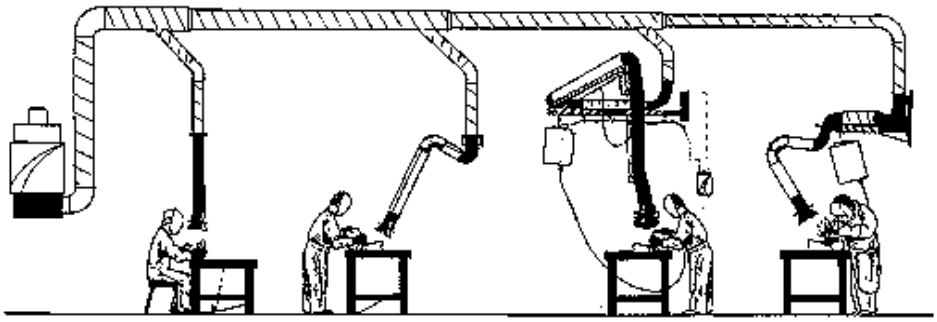

b

c

Figure 5.8. Welding fume control system with flexible extraction arms: **a** - system schematic, **b** - welding shop at John Deere Harvester Works plant in East Moline, Illinois; **c** - body shop at Mercedes-Benz Plant in Tuscaloosa, Alabama.

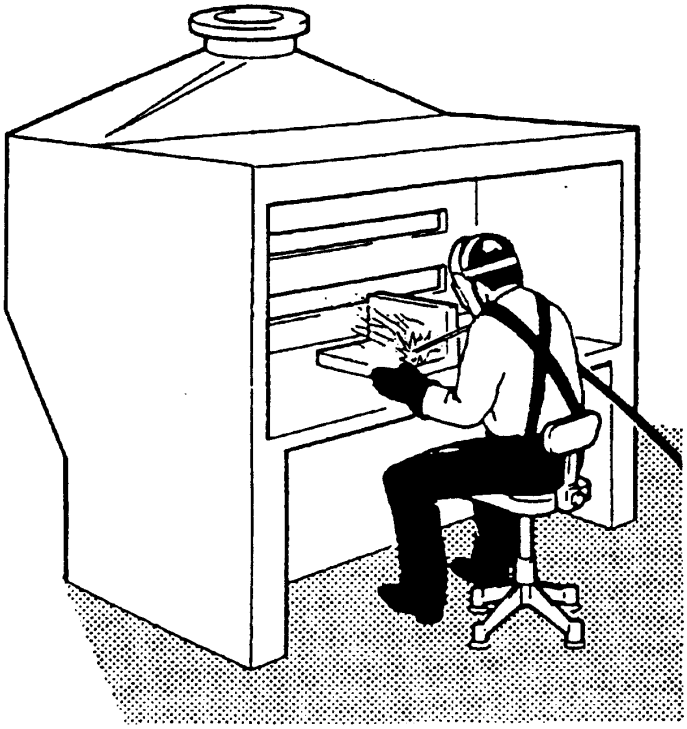

Figure 5.9. Cross-draft welding bench enclosed at sides, back and top for low volume small parts manufacturing.

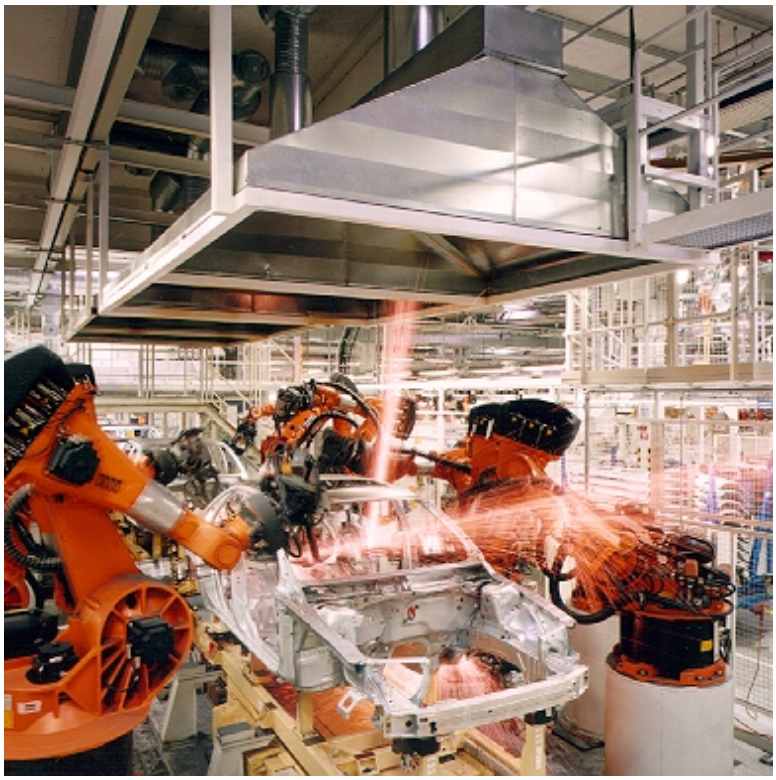

Figure 5.10. Double canopy hood 3 m x 5.5 m each are installed over welding robots at the height of 3 m at Volvo Cars body shop in Goteborg, Sweden. From 15,000 to 18,000 m^3/h of air contaminated with welding fumes is exhausted from each hood outside the building without cleaning from fumes.

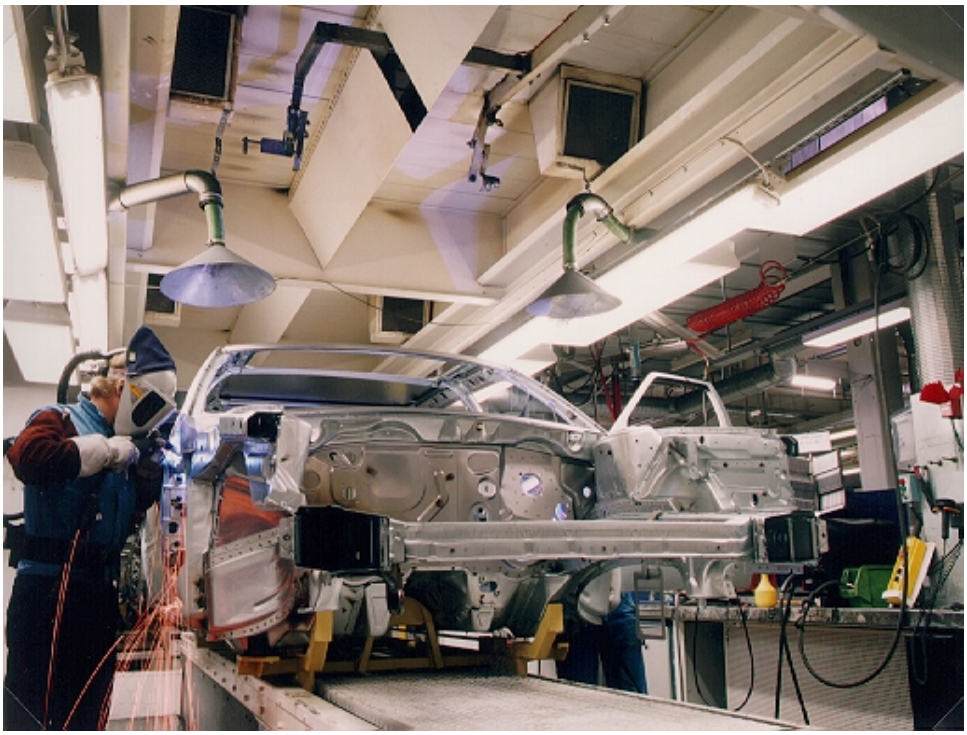

Figure 5.11. Canopy hood above manual welding and grinding station supplemented by local extraction hoods at the Volvo Cars body shop in Goteborg, Sweden. Manual welding operations are carried out using personal protective equipment consisting of face mask connected to the back mounted filter equipment supplying breathable air under the mask.

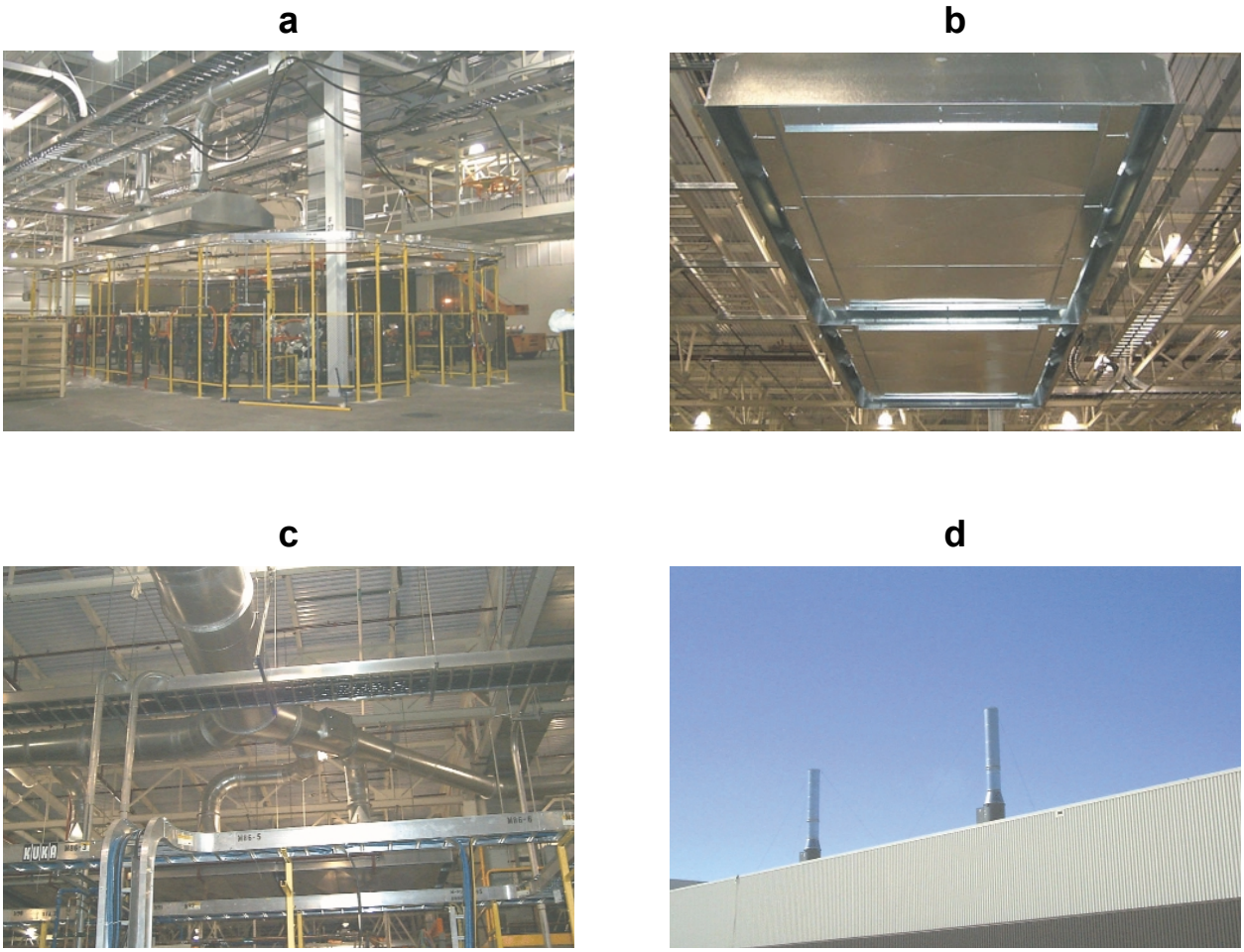

Figure 5.12. Centralized local exhaust system with canopy hoods installed over welding robots at Ford Wayne Integrated Stamping and Assembly Plant in Detroit, Michigan. Approximately 40,000 cfm is exhausted by each system outside the building through the roof-mounted stack: a - overhead hoods installed above the robotic welding area (hoods connected to the same exhaust system are installed in line along the welding conveyer); b - hood with a central plate forming a slot along the hood perimeter; c - duct system collecting contaminated air captured by single hoods; d - exhaust stacks.

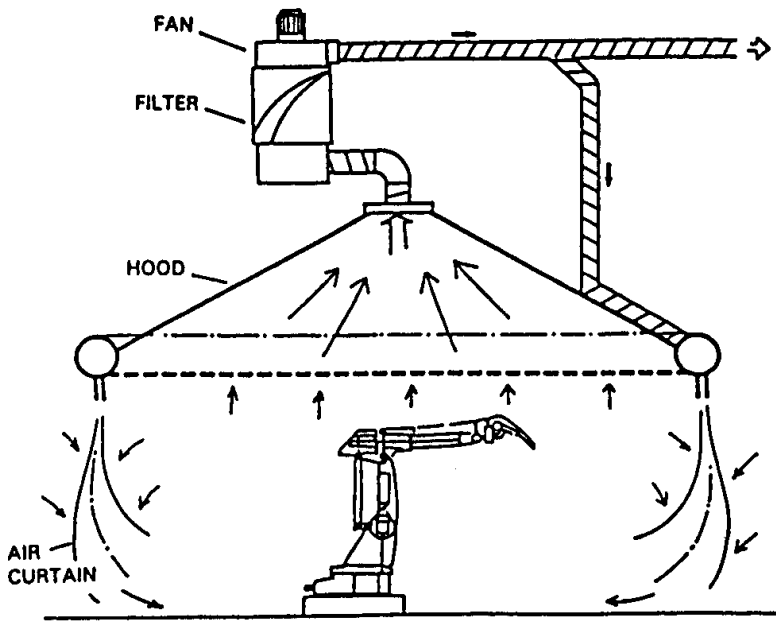

Figure 5.13. Push-pull hood. A canopy hood with an incorporated slotted nozzle installed along perimeter of the hood to prevent contaminated air transfer from the welding area. Push-pull hoods can be used when conventional canopy hoods with plastic curtains are impractical. Air supplied through the nozzle creates steady air curtain protection along the contour (US. Patent).

a

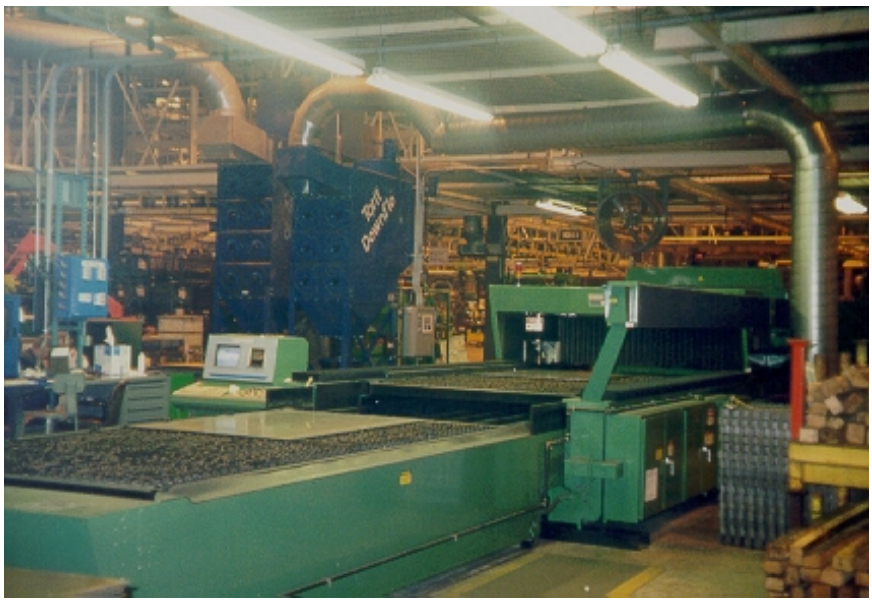

b

Figure 5.14. Downdraft plasma-cutting table: a - Torit fume control system at John Deere Harvester Works plant in East Moline, Illinois; b - KAPPA plasma-cutting table with a Plymovent AB cartridge filter.

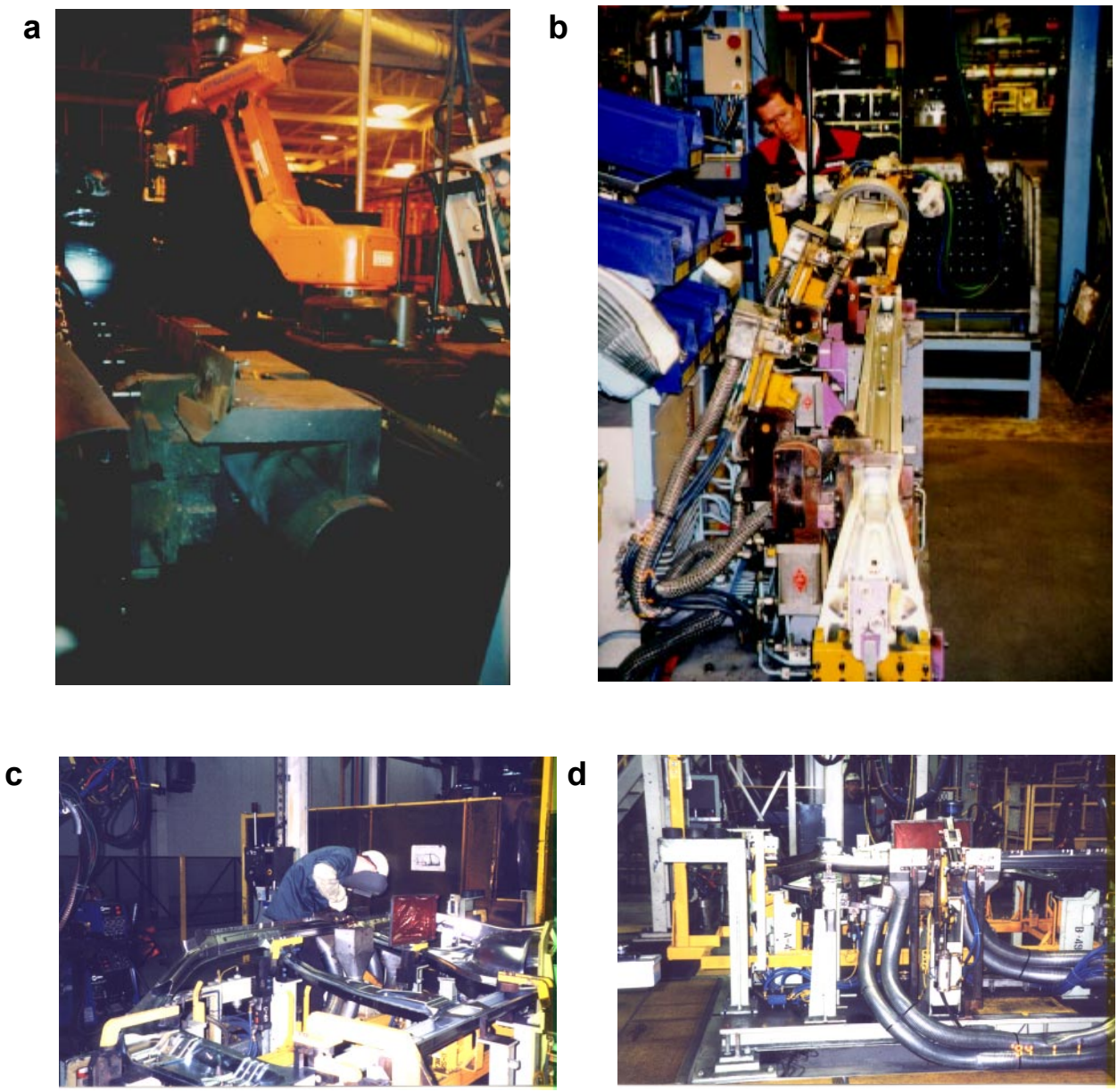

Figure 5.15. Specially engineered exhaust system built-in the fixture: a - at John Deere Harvester Works in East Moline, Illinois; b - at Scania Cabin Plant in Oskarshamn, Sweden; c, d - at Mercedes-Benz Plant in Tuscaloosa, AL.

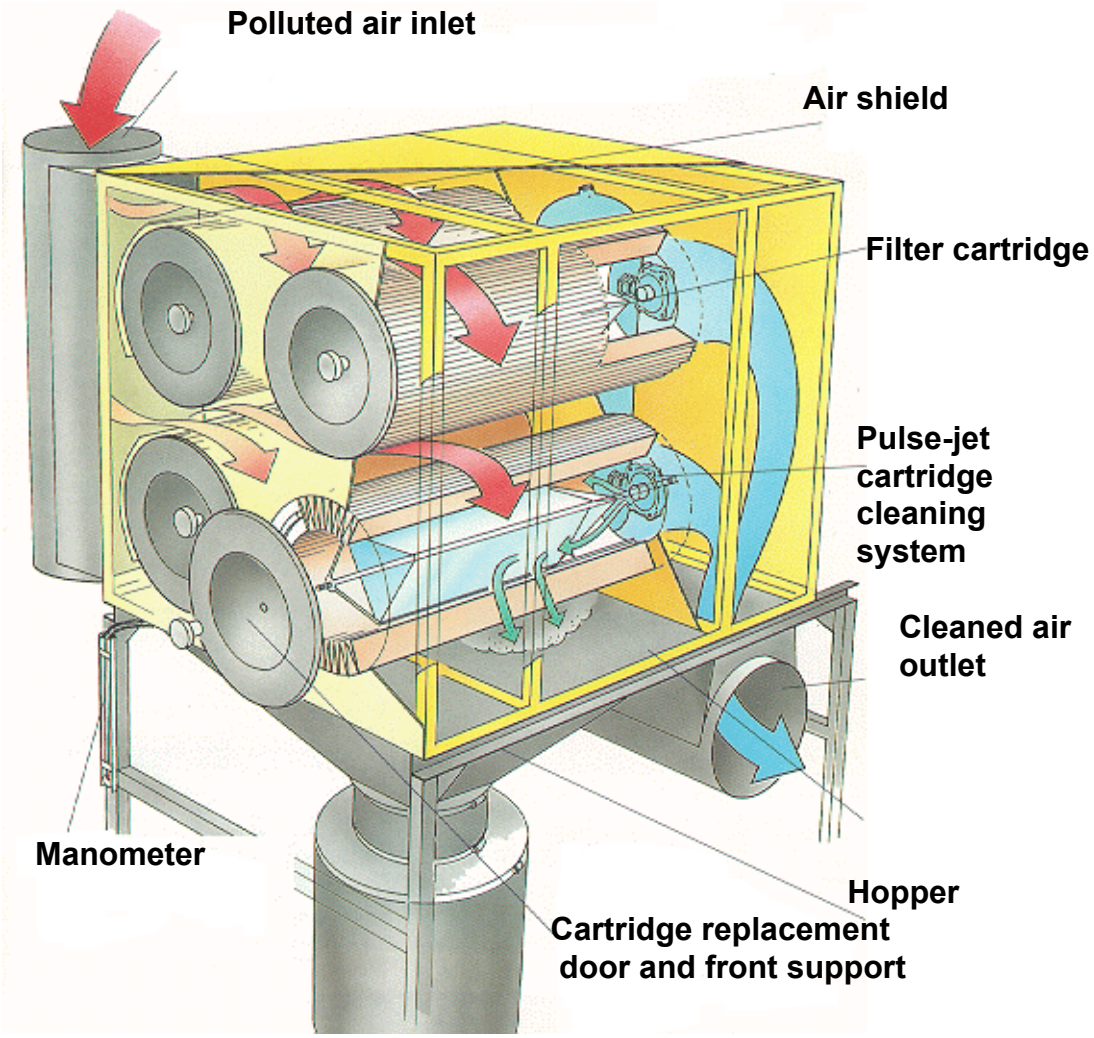

Figure 5.16. Schematic of a self-cleaning cartridge filter. Reproduced with permission from Plymovent AB.

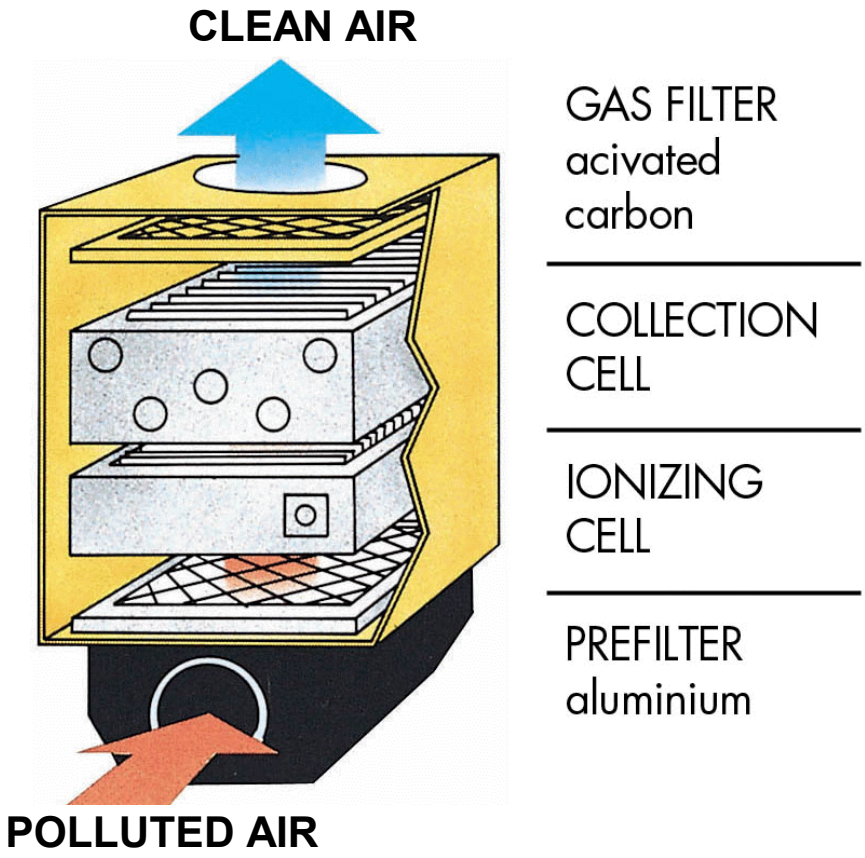

Figure 5. 17. Schematic of a two-stage electrostatic filter.
Reproduced with permission from Plymovent AB.

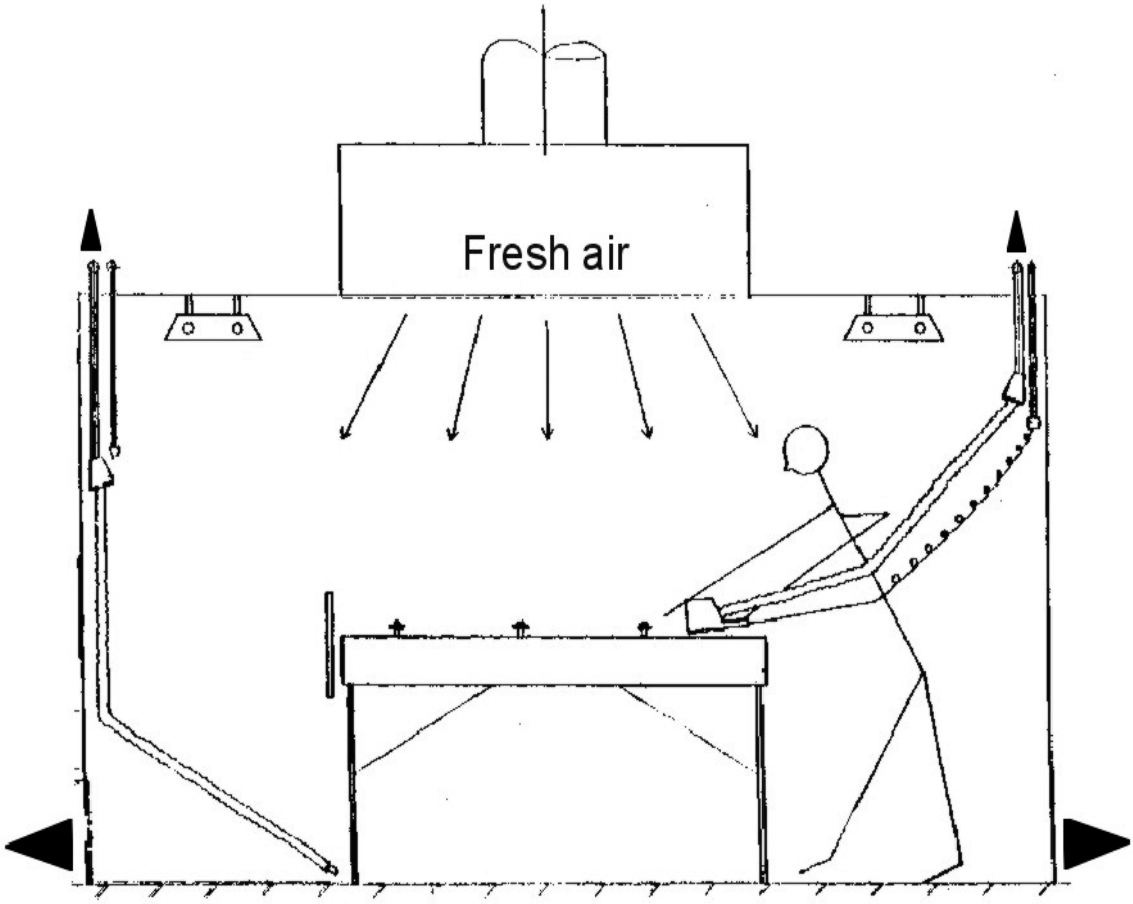

Figure 5.18. Schematics of air supply and exhaust for the booth with aluminum grinding and polishing operations.

6. MACHINING PROCESSES

6.1. Process description

Machining operations are a form of metal cutting, grinding, drilling, milling, broaching, boring, honing, polishing, etc. These operations may be done with (wet) or without (dry) the use of a metal working fluid, (coolant), to remove heat and chips.

Dry machining is most often done for rough shaping of a part. More precise tolerance cutting is most often done subsequent to the dry, rough shaping operations and is most often done wet (with MWF).

Machines may be single or multiple station designs but usually have some type of transport system integrated into the machine design. These machines can be designed for all types of metal removal operations , but usually do only one type of operation at each station.

Refer to Appendix 1 for a detailed list of various machines.

6.2. Contaminant Emissions

Contaminants released during dry machining operations are metal particles (dust) from the part being machined, and from the machine tool. Particle size will vary depending on the specific operation from sub-micron, to several microns.

Contaminants released during wet machining operations are in the form of vapor and mist from the metal working fluid being used (Figure 6.1).

The contaminant emissions from machining operations may contain a solid or liquid particle in suspension in the air, or a gas.

6.3. Target Levels

Occupational respiratory illnesses due to exposure to metalworking fluids include respiratory irritation, bronchitis, pneumonia, pneumonitis, and extrinsic asthma. [5,12,15,18,21,23,26,40,41,42,43]
There is strong epidemiological evidence that exposures to all types of metalworking fluids cause substantially elevated risk of cancer. Workers experience skin contact with machining fluids as a result of splashing, dripping or leaking. Skin problems include irritation and allergic contact dermatitis [42]. They also inhale mists and aerosols of these fluids generated during high speed, high friction, metalworking operations. The use of synthetic cutting fluids has recently become questionable, due to discovery of diethanol nitrosamine, a suspect cancirogen, as a product from the reaction of amones with nitrites. No environmental limit exists for airborne concentrations of synthetic fluids, although standards may exist for specific additives or components [31].

Table 6.1 shows examples of current exposure limits used in different countries or adopted by different auto manufacturers for mists/vapors resulted from wet machining operations.

Table 6.1. Current and Proposed Exposure Limits

Country	Period	Level (mg/m^3)	Comments
USA [3, 31,44]	pre-94	5.0	All US Auto manufacturers, OSHA PEL, ACGIH TLV
			UAW agreement with US auto manufacturers
	1/94	2.0	UAW agreement with US auto manufacturers
	1/95	1.0	UAW agreement with US auto manufacturers "in new plants if possible"
	1/96	0.5	
	1998	0.5	NIOSH proposal
Sweden [4]	1996 (1990)	1.0	LLV - Level limit value (8 hr. working day)
		3.0	STV - Short-term value (< 15 min)
Germany [45]		10,0	TRGS 9000 for aerosols and vapors
		10,0	ZH 1/248 for aerosols – union requirements
		20,0	ARW for aerosol and vapor
		5.0	ARW for aerosol
		$2\mu g/m^3$	TRK for Bensopyrene
		26	MAK for Ethylenglycol
		7	MAK for HCl
		0.2	MAK for AsH_3
		0.5	MAK for SbH_3
Russia [17]	1988	5.0	PDK - maximum allowable concentration
France [22]	1985	1.0	I.N.R.S.

6.4. Measures to reduce occupational exposure to metalworking fluids.

To reduce the initial generation of MWF mist and subsequently reduce employee health risk resulting from the MWF mist exposure, several process-related measures should be considered:

- selection of coolants (emulsion or oil);
- application of low emission coolant;
- application of coolant with lower health risk;
- machine enclosure/process exhaust;

The selection of various coolants to be used in machining operations is not within the scope of this document, and is usually under control of the machining operations engineer, not the mist control engineer. Refer to the Appendix 4 for information on coolant types and uses.

Considerations for the Design of Machine Enclosures for Airborne Contaminant Control [24,25]

Enclosures shall be used to control airborne contaminants that are generated by the machining process. These contaminants can be in the form of coolant mist, vapor and smoke, and dust from the materials being cut and from the tool doing the cutting, as well as heat.

Enclosures form a barrier between the process and the operator's environment.

An enclosure is a type of hood as defined by the ACGIH [2]:

"Hood types may be grouped into two general categories: enclosing and exterior."

Enclosing Hoods – those that completely or partially enclose the process or contaminant generation point.

Exterior Hoods - hoods that are located adjacent to an emission source without enclosing it.

Total (or complete) enclosure is a box or housing mounted around the machine or process. The housing is not intended to be air-tight. Limited openings are required to allow for part entry/egress, maintenance or utility access. They also provide a path for replacement air to enter, if the enclosure is too tight "Aspiration" openings will be required for proper ventilation.

Large machine enclosures may be interpreted as confined space safety concerns if the operator/ maintenance personnel are required too physically enter the enclosure. It is recommended that the enclosure be designed to preclude confined space problems. One solution is to design a smaller, rather than a larger enclosure and allow access via doors arranged such that an operator/maintenance person can do his job without physically entering the enclosure. Another suggestion for an in-line transfer machine is to design the wing base such that the tool can back out of the enclosure far enough to allow access without entering the enclosure.

Enclosures.

The difference in the contaminants, wet versus dry, requires totally opposite criteria to provide a satisfactory contaminant control system.

The dry contaminant control system must capture and transport away from the machining operation all of the contaminants or dust. Machine enclosures designed for wet operations will allow a build-up of dust and chips on all horizontal surfaces, and must be manually cleaned on a regular basis.

The wet contaminant control system does not want to capture and transport coolant or chips, but only control them by keeping them within the enclosure.

The specifics of the metal working fluids being used are covered in other sections of this guide, and are not included in this section. The first step in controlling the release of these emissions, is the enclosure. This, in simplistic terms, is putting a box over the operation.

The enclosure, sometimes referred to as "Dry Floor Guarding", has developed from early attempts to use solid guards around the machines to restrict splashing of coolants being used, and protect the operator from moving machinery. Today's enclosures represent the optimum contaminant control and operator protection. For more information regarding enclosures refer to [6,14]. Schematics of some typical machine tool enclosures are listed in Appendix 2.

6.5. Ventilation

6.5.1. Principles of Ventilation. Ventilation systems in machining shops typically consist of process and local exhaust systems plus general ventilation supply and exhaust systems. The most efficient method of oil mist control in the occupied zone of the machining shop, is exhaust systems connected to close capture enclosures or total machine enclosures (Figure 6.2). When such enclosures are not practical (e.g., when retrofitting existing systems with machines built without enclosures), different types of hoods should be considered to capture the contaminant near the source Figure 6.3). General ventilation is needed to dilute fugitive contaminants that were not captured by process exhaust systems, to dilute oil vapors resulted from oil evaporation from spills and machined parts and to reduce humidity when

emulsions are used as coolants. General ventilation systems supply make-up air to replace air extracted by process and general exhaust systems. Also, supply air is used to heat and cool the building. Good engineering practice is that the outside air supply should exceed the exhaust rate by 10%. Buildings should be pressurized to prevent air infiltration creating cold drafts in the winter, and hot humid air in the summer.

6.5.2. Process and Local Exhaust Ventilation. Local exhaust systems capture air contaminants very close to their source. These systems will only be effective if they are correctly designed, installed, maintained, and used. Local exhaust ventilation systems consist of the following basic elements: capture hood or collector connected to machine enclosure, duct system, oil mist or dust collector, fan, and discharge ductwork. Machine enclosure (e.g., Figure 6.4, Figure 6.5, Figure 6.6, Figure 6.8, Figure 6.9) or hood (Figure 6.7) must be specifically engineered for each application.

Process Exhaust Design Principles:

Process exhaust systems within a facility performing machining operations serve a number of critical services:

- Provide a means of creating a vacuum within the machine enclosure, or at the close-capture hood.
- Provide a means of transporting aerosols from the machine enclosure to the mist collection unit or dust collector.
- Provide a means of moving contaminant-laden air through the filtration or collection unit.
- Provide the means to re-introduce the cleaned air into the facility, or discharge to atmosphere outside of the facility.

The design principles for process exhaust systems for “wet” machining with enclosures, and “dry” machining are not the same!

- Wet machining (with enclosures) -The design principle is to contain the mist within the enclosure.
- Dry machining - The design principle is to capture the dust, and transport it to the collection unit.
- Wet machining without enclosures) - The design principle is the same as for dry machining, capture the aerosols, and transport them to the collection unit

The choice of local ventilation system type depends on type of machine and the process. Capture velocities should be selected to adequately control vapors, smoke and mist being generated while not removing chips, and metalworking fluids [24].

The capture velocity for coolant vapor and mist depends on the direction and inertia of the coolant vapor and mist and the motion of the ambient air.

Capture or Control, this basic must be established to determine the correct airflow.

“Capture” – to capture the released emissions, the goal is to reach out from the face of a hood to the point of emission release, and create sufficient air currents to pull the emissions to the hood.

“Control” - to control the released emissions within an enclosure, he goal is create sufficient air currents at each opening of the enclosure to prevent the escape of the emissions.

Appendix 2 contains a more detailed explanation of these totally different design philosophies, along with sketches and the required formula to establish the airflow required. Refer to the section on wet operations for "control", and the section on dry operations for "capture".

Recommended capture velocities (Table 6.2.) vary from different sources, caution should be used when selecting a capture velocity based on examples of different process types.

Table 6.2. Range of Capture Velocities

Condition of Dispersion Of Contaminant	**Capture Velocity, FPM** [16]	**Capture Velocity*, FPM** [2,7]
Released with practically no velocity into quiet air.	0.2 m/s (40 FPM)	50 – 100 (0.25 – 0.50 m/s)
Released with low velocity into moderately still air.	0.4 m/s (80 FPM) for room air movement with velocity ~ 0.2 m/s (40 FPM)	100 – 200 (0.50 – 1.00 m/s)
Active generation into zone of rapid air motion.	1.2 m/s (236 FPM) for room air movement with velocity ~1.0 m/s (197 FPM)	200 – 500 (1.02 – 2.50 m/s)
Released at high initial velocity into zone at very rapid air motion.		500 – 2000 (2.54 – 10.00 m/s)

*) In each category above, a range of capture velocity is shown. The proper choice of values depends on several factors:

Lower End of Range
1. Room air currents minimal or favorable to capture.
2. Intermittent, low production.
3. Large hood – large air mass in motion.

Upper End of Range
1. Disturbing room air currents.
2. High production, heavy use.
3. Small hood – local control only.

Advantages and disadvantages of typical enclosures and hoods are summarized in Table 6.3.

Table 6.3. Advantages and disadvantages of enclosures and hoods used in machining processes. Reproduced from [24].

System Type	**Advantages**	**Disadvantages**
Close capture	Low exhaust volume Low material cost	May interfere with operator May pull chips and/or metalworking fluid May restrict visibility
Total enclosure	Low exhaust volume	May restrict visibility
Tunnel Enclosure	Low exhaust volume Joins process to reduce air volumes further than individual total enclosures	May restrict visibility
Push-pull hood	Best use of replacement air system	Susceptible to cross currents in area
Side draft hood	Better visible access	Inefficient removal of fumes and vapor Susceptible to cross currents in area
Canopy hood	Complete visible access	Inefficient removal of fumes and vapor Large exhaust volume Susceptible to cross currents in area
Down draft hood	Better visible access	Inefficient removal of fumes and vapor Susceptible to cross currents in area

Centralized Vs. single machine exhaust systems. Local exhaust systems can control oil mist emission from either a stand-alone machine (a small group of machines) (Figure 6.4) or from a group of machines (with several dozens air intakes) (Figure 6.2, Figure 6.5, Figure 6.6, Figure 6.19) or from a transfer line. Considerations on system size selection: stand-alone machine system vs. centralized system is made based on:

- process layout;
- availability of area for oil mist control equipment and a ductwork;
- type of the local system: with filtered air returned to the building or air exhaust outside the building;
- life-cost analysis of options based on installation, operating and maintenance costs.

Equipment available on the market allows to combine exhausts from machines with a total exhausted airflow rate requirements up to 85,000 m^3/h (50,000 cfm) into a single system.

The costs analysis based on the data from [8] presented in Table 6.4 shows, that centralized oil mist control system is cheaper to install, operate and maintain compared to a single machine system.

Table 6.4. Relative cost of mist control and collection for new machines (per each machine)

Costs	Single machine with collector,%	8 single machines with one collector,%	15 station transfer line with collector,%
Total installation costs	100	83	115
Operating costs per year	100	35	71
Maintenance costs per year	100	25	50

The information on size, number and location of centralized oil mist control systems might be required prior the process being finalized and machines selected. The information on approximate airflow rates to be extracted from machines and transfer lines presented in Appendix 3 can be used for preliminary system selection and dimensioning. To accommodate potential changes in the process design and/or machines selection the total estimated airflow rate can be increased by 20 - 25%. Oil mist control system is more flexible for adjustments of airflow rates from single hoods and relocation of machines when the main duct is designed as a collector with low transport velocities. Additional tee's with end caps should be attached to the main duct to accommodate connection to additional machines or machines relocation in the future. Table 6.5. and Tables 6.6. summarize the above discussion.

Table 6.5. Central systems pros and cons

PROS	**CONS**
Less costly maintenance only because one unit to maintain, one fan etc.	Ducting is more expensive
Collector cost is less	If machines are relocated, it may be difficult to reuse ducting. Plenum ducting makes this easier
Collector installation is less costly (drains, power drops, etc.)	

Table 6.6. Local-machine mounted systems pros and cons

PROS	CONS
Stays as part of machine when relocating	Total collector cost higher
Less ducting cost	More collectors to maintain
Uses less floor space	

6.5.3. General Ventilation (see Chapters 9,10,11)

6.5.4. Re-circulation. MWF mist collectors typically do not separate oil vapor from the air stream. In the mist collector, most of the droplets are removed from the air stream (collector efficiency). The unremoved droplets and all of the vapor will pass through the collector and stay in the cleaned air stream. The test data reported by Cooper et al. [10] show, that approximately 10% of the mass of the straight oils in the "dirty" air stream, 14% of the soluble oil fluid and 1.4 % of the soluble oil emulsion penetrate through the collector in the vapor phase. Figure 6.1 shows schematically the potential fates of oil mist droplets that enter the filtration system. The data from Leith et al. [28] show that from 16 to 30% of the mineral oil droplets that enter the filter evaporate and penetrate the collector as vapor. The message that should be taken from this discussion is that even if theoretically a MWF mist collector could be 100% efficient for all droplet diameters, vapor will still penetrate the collector. In the case of soluble oil, the water component also evaporates and increases humidity of the cleaned air.

By re-circulating air back to the building, MWF and water vapors are adding to room air contamination. When the building is air conditioned the vapors in the return air will condense on the cooling coils, and will contaminate other upstream equipment and supply duct surfaces. One of the alternatives to energy conservation by air re-circulation (e.g., Figure 6.6) is heat recovery from the filtered air which is exhausted outside the building (Figure 6.10). Air re-circulation may be considered in case of local exhaust system providing oil mist control for one or few stand-alone machines. Table 6.7. and Table 6.8. summarize the above discussion.

Table 6.7. Exhaust air return into the building pros and cons

PROS	CONS
Saves heating costs	Vapors to plant increases
No holes in roof	Ventilation requirement may increase
Less ducting & no stack required	Humidity increase on water coolants
Permitting may not be required	

Table 6.8. Exhaust air outside the building pros and cons

PROS	CONS
Vapors not discharged to plant	Possible roof contamination
D.O.P. or Hepa filters not required	Mist/smoke bypass not noticed
Collector horsepower is reduced. Lower energy costs	Air to air heat exchanger cost (if used)
	Difficult to do in existing plants unless air make-up increases

With a re-circulated exhaust, the filter efficiency becomes extremely important, the amount of mist escaping from the filters will quickly mitigate any attempts to clean up the indoor air.

The difference in efficiency between a 95% efficient filter, and a 99.99% efficient filter when the full amount of metal working fluids mist generated in a modern manufacturing facility, must be taken into consideration

6.5.5. Oil mist separation

6.5.5.1. Collector Selection. MWF Mist Collectors are used to remove airborne MWF mist from an air stream. The mist collector is part of a mist collection system and typically includes the fan and controls. Mist collectors may be small individual units to handle approximately 1700 m^3/h (1000 cfm) of air flow or large collectors that may work with either a centralized local exhaust or a general ventilation system with an airflow rate up to 85,000 m^3/h (50,000 cfm).

To properly select an MWF mist collector the system design should be done first; including type of enclosure or hooding, approximate number and location of exhaust drops, type of ducting, etc.
If the system design is poor or not considered up front, it may not matter what type of collector is used. The results could be high maintenance, low efficiency and wasted money. For the information on proper system design is refer to [2, 6,7,14].

It should be noted that most of collectors are designed to capture aerosols only. It is not cost efficient to use collectors capable of efficient removal of oil vapors from the air stream.

MWF Mist Collectors are selected based on the following factors:

1. Oil mist concentration.
2. Efficiency requirements.
3. Energy Consumption. All collectors consume energy in order to overcome pressure drop through the collector. The pressure drop is measured in inches of water. Energy is also consumed during the cleaning of contaminant from collectors.
4. Maintenance costs. Some collectors can be cleaned on-line, others require off-line cleaning or replacement of filtration elements.
5. Initial cost

Types of MWF Mist Collectors

Virtually every air filtration device previously used to remove dust or dry particulate may be, and has been, used to remove MWF aerosols from the exhaust air stream. The specific type of device to be selected will be based on the user's criteria in regards to initial cost; operating cost; removal efficiency; maintenance requirements; and physical space requirements.

Many of the MWF Mist Collectors are multi-stage devices, using several of the mechanisms of mechanical filtration shown below.

Mechanisms of Mechanical Filtration

There are three different processes responsible for the capture of a particle in a mechanical filter impingement, interception and diffusion. Usually one prevails in a specific collector, but rarely is it the exclusive mechanism.

Impingement Filters.

Impingement filters are mechanical filters whose principle mechanism of filtration is impingement. These filters can be categorized by their configuration: Panel Filters; Roll Filters; Lint Filters (special application of roll filters); or washable metal-panel filters.

Panel filters are fixed media air filters in which the face velocity and the media velocity are essentially the same.

ACGIH, Industrial Ventilation Manual [2], Table 4-5. Media velocity Vs. Fiber Size, panel filters are shown to have a nominal fiber diameter of 25-50 micron, with a media velocity of 250-650 fpm, and a filtration mechanism of impingement. These filters are at the lower end of the efficiency range.

Extended Surface Filters [32]

Extended surface filters consist of that category in which the filter media area is greater than the filter face area, (media velocity is less than the face velocity).

The most common method of increasing media area is to pleat the filter media, and to extend the pleated filter depth. However, other configurations are also used.

Filters designed with extended media surface are desirable for the following reasons:

- Media may perform more efficiently at lower media velocities, especially true for filters that depend on interception and diffusion as the primary mechanism.

- Media resistance may be too high when the material is used in a flat sheet, typical of high efficiency media.

- Filter life will be extended due to the increased dust holding capacity of the additional media.

Extended surface filters are characterized by the type of media used, and the configuration into which it is formed:

Filters using mat type media
- Non-supported pocket (bag)
- Supported cartridge
- Rigid cell type
- Pleated panel

Filters using paper media
- With corrugated separators
- Close-pleated style.

Non-supported Mat Filters

The non-supported mat filter is one of the more popular, high efficiency filters used for general air filtration. These filters are commonly referred to as “bag filters”, or “pocket filters”.

These style of filters use a rigid face plate to which the filter elements are fastened too, when air is moving through the bags or pockets, the element expands exposing all of the media to the air stream.

Cartridge Type Filters

There are various configurations of cartridge type filters, one model is the cube filter which is normally rectangular in shape. Internal support grids may be sewn into the air entering side of the cube, or metal headers may be used to allow for use in standard HVAC filter housings or filter tracks. Another design of cartridge filters uses a wire back frame to create several pleats, which increases the media area.
The media for both of these filters is approximately 1" (25.4 mm) thick, and some versions use a dual media, with different fiber size and density.

Rigid Cell Filters

Rigid cell, deep pleated filters consist of a high efficiency media with backing bonded to a welded wire or expanded metal grid. The media is pleated and the pleat spacing is maintained by using contour stabilizers on the upstream and downstream side of the pleats. The pack is then sealed into a galvanized steel filter frame with diagonal supports, forming a rigid box.

Pleated Panel Filters

Pleated panel filters may be fabricated in depths of 1" (25.4 mm), to 6" (152.4 mm), using a cotton/polyester blend media with a expanded metal or welded wire support grid. These filters have a much higher efficiency than glass or plastic mat panel filters while maintaining an acceptable pressure drop. In addition, pleated panel filters have longer service lives in typical HVAC systems than the glass or polyester mat configurations.

Paper Media Filters

Most of the paper used in air filtration is made by mixing a slurry of water, filter fibers, and binder. Filter fibers can be glass, synthetic or natural cellulose materials. After the material is dried, waterproofing and fungicidal treatment is added. ASHRAE dust spot efficiency for this media can range from 98% to 60%.

Pleated paper filters with corrugated separators are fabricated by pleating the filter media over corrugated aluminum separators to form a filter pack. The pack is usually sealed in a light –gage metal frame. Face velocity for these filters may range from 250 – 500 fpm, (1.27 – 2.54 m/s).

Close-pleated filters are formed by pleating paper media into a filter pack using string, media ribbons, adhesive beads, or other methods to maintain pleat spacing. This pack is then sealed into a metal frame to form rigid panels.

Fabric filters can be effective when new, but their performance decreases over time with liquid loading [28].

Final Filters

The Institute of Environmental Sciences (IES) defines a HEPA filter as "a throw-away extended media dry-type filter in a rigid frame, having minimum particle-collection efficiency of 99.97% for 0.3 micrometer (micron) thermally-generated dioctyl phthalate (DOP) particles or specific alternative aerosol, and a maximum clean-filter pressure drop of 1.0 in. w.g. when tested at rated air flow capacity"

Cartridge type 95% DOP filters or Hepa Filters are often used as a last or monitoring stage when discharge is re-circulated to the plant. These should be capable of high removal efficiency down to 0.3-micron size particles. The 95% DOP filters and the HEPA filter have efficiency 99%+ with a pressure drop 350-500Pa. Tests reported by Leith et al. [28] demonstrated high efficiency of 95% DOP filters for all sizes of droplets. Based on these findings, it was concluded that the additional expense of using a true HEPA filter instead of 95% DOP filter as a final stage seems questionable.

Various Mist Collection Equipment

Centrifugal (Figure 6.11). Centrifugal impaction filter is a spinning perforated steel drum with internal blades creates the negative pressure required to pull the mist laden air into the unit. The aerosol is impacted on the blades in which the particles are forced to coalesce before being thrown by centrifugal force against the inner surface of the outer casing. Some units are equipped with a foam filter pad to aid coalescence. Optimum particle size, greater than 10 micron. Liquid is gravity drained.

Spiral Tube Separator (Figure 6.12). This unit consists of a series of separator tubes, each containing a spiral insert. Mist is separated by centrifugal force and impingement.

Impingement plates (Figure 6.13). Mist is separated by directional change and impingement of mist particles. The centrifugal force propels the mist and particulate to the wall of the tube where it forms a fluid film. Liquid is continuously drained to the bottom of the collector.
Optimum particle size, greater than 10 micron.

Mesh (Figure 6.15). Mesh is available in many materials, including polypropylene and aluminum. The media may be crimped, knitted or random packed strands. Pressure drop and efficiency depend on the media and packing density. . The air stream passes through the media , where small droplets coalesce into larger ones. The density of packing may be varied to achieve the desired efficiency for use as a first, second, or third stage. To achieve an optimum efficiency, mesh filters require a certain level of liquid saturation. This can be achieved by adding spraying system. Spraying liquid is injected in adjustable intervals in order to maintain a certain level of liquid saturation during operation and at the start. mesh filters may be removed and cleaned with a help of a high pressure steam cleaner once or twice a year. Typical mesh filters are 600 mm x 600 mm (24 inch X 24 inch) and can be 25 mm to 160mm (1 to 6 inches) thick.

Fiber Bed Filters [36]

Fiber Bed Filters are a member of the Fiber Mist Eliminators family, these devices are produced in various configurations. Generally, randomly oriented glass or polypropylene fibers are densely packed between reinforcing screens, producing fiber beds varying in thickness usually from 25mm to 75mm (1 to 3 in.), although thicker beds can be produced. Units with efficiencies as high as 99.99 percent on fine particles have been developed. [9]

Controlling mechanism -	Brownian movement
Superficial velocity, m/s -	0.075 – 0.20
Efficiency, particles > 3 micron -	Essentially 100%
Efficiency, particles < 3 micron -	95 – 99+
Pressure drop, cm H_2O -	12 – 38 (4.72 – 14.96 in.)

Recent testing at the Department of Environmental Sciences and Engineering, Baity Laboratory for Environmental Engineering, University of North Carolina, Chapel Hill, NC. provided the following results: "the collector (fiber bed) removed virtually all mist droplets of soluble oil and synthetic fluid to the limit of our ability to detect them; the collector removed all mist droplets of mineral oil greater than 0.54 micron and 99.9% of the mineral oil droplets between 0.27 and 0.54 micron." [27]

Electrostatic Precipitator

An electrostatic precipitator operates by electrically charging the MWF mist particles and collecting the charged particles on oppositely charged plates (Figure 6.14). This type of filtration is effective on small, sub-micron sized particles. Also, the pressure drop through this type of collector is usually the lowest of the available options, allowing reduced horsepower blowers. Unlike many other collector options, there is no filter to replace. Disadvantages include the requirement for frequent maintenance. The collection plates must be cleaned frequently to maintain filtration efficiency and remove film of oil. As oil film grows, filter efficiency is reduced. Filtration efficiency varies from 90% to 99% on sub-micron sized particles. Not recommended for use with combustible or flammable MWF.

Deep Bed Filter (Figure 6.16): The MWF laden air is forced through a layer of porous filter media consisting of fiberglass fibers or plastic granules. The large porous volume of the bulk material operates as deep-bed filter and ensures high retention of the MWF mist without significant reduction in air permeability. The separated coolant forms a fluid film, which seeps due to gravity to the bottom of the bed. Porous filter packing allows to clean filter bed with rinsing nozzles. Cleaning process can be performed using the nozzles either built-in the collector casing or filter elements can be cleaned outside the filter casing.

Wet Scrubber – Venturi Type

A wet scrubber separates mist by high velocity impaction at the venturi throat. In the venturi-type scrubber shown in Figure 6.17, polluted air passes through a venturi-shaped orifice. Scrubbing liquid is added either at or up stream from the venturi throat. The rapid acceleration of the gas shears the liquid into a fine mist, increasing the chance of coolant mist and scrubbing liquid mist impaction. Baffled separators follow the venturi throat to remove the droplets from the air stream. Also, wet scrubbers allow good performance in capturing oil vapors. Wet scrubbers can be used with combustible coolants. However, they are more expensive and have higher energy consumption. This method can be used to collect from both wet and dry machining.

Multi-stage collectors

Multi-stage devices offer advantages, and disadvantages for the owner:

Advantages: Ability to use filter devices of lower efficiency and cost to reduce loading and extend service life of the higher efficiency and cost downstream stages.

Disadvantages: Stocking of various types of replacement devices.
Increased cost of monitoring controls for individual stages.

The lifetime of the final filter stage depends upon the cumulative loading it receives, which depends, in turn, on the performance of the collection stages upstream. For continued long life, the first and second collection stages must be as efficient as possible.

Example of the typical multi-stage collector arrangement:

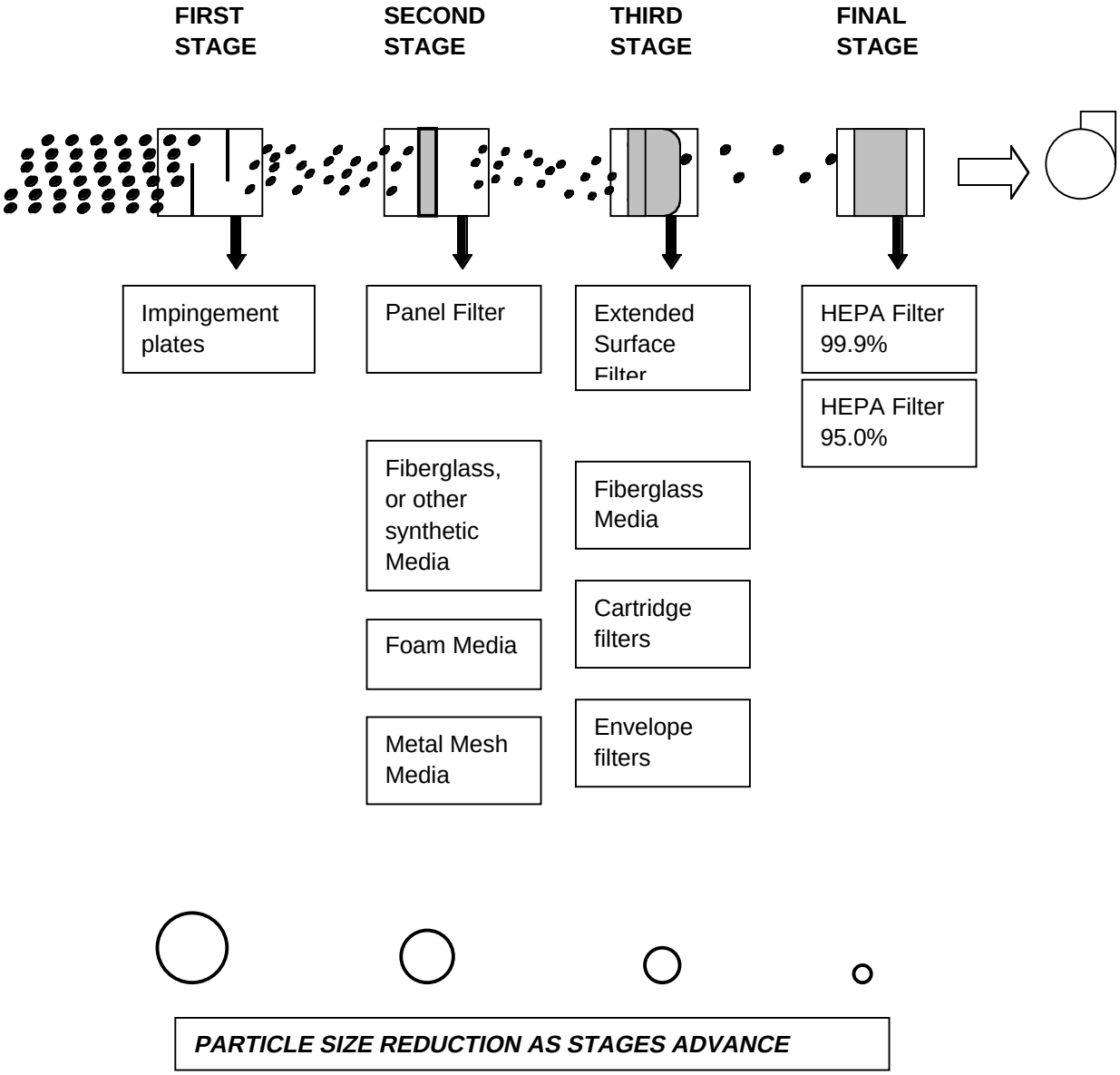

PARTICLE SIZE REDUCTION AS STAGES ADVANCE

ARRESTANCE 50 – 70 % (< 10% DOP)	**ARRESTANCE 60 – 85 %** (< 10% DOP)	**EFFICIENCY 50 – 95 %** (< 60% DOP)	**DOP 95 – 99.9 %**

EFFICIENCY INCREASE AS STAGES ADVANCE

6.5.5.2. Desirable Collector Features

Housing Construction: Minimum 14 gage steel reinforced to prevent deformation from the negative pressure. Drain pan area should be welded solid inside and outside.

Inlet Drop-Out: The collector housing should include a low velocity dropout section with an easy open access door for cleaning.

Access Doors: Include easy to operate door latches and vertical hinges so that door weight is supported by collector and not maintenance personnel. Mechanically fastened gaskets should be provided (not glued). Gasket material to be compatible with metal working fluids.

Filter Wash Down: Certain types of collectors can utilize internal flush systems to reduce manual maintenance. The metal working fluid or sometimes plant water is used for flushing. The internal piping and housing connection only can be provided for future hook-up and use if necessary. When washdowns are in use, the collector fan should be off.

Drain Trap: If the collected coolant will be gravity drained it is necessary to provide a trap in the drain line. The trap height should be equal to or greater than the fan suction pressure. A bucket type trap is recommended with a removable cover to allow cleaning.

Drain Sump: If the collected coolant is to be pumped to an overhead line or reservoir, it is best to include the required sump, pump and controls as an integral part of the collector.

Fan: For quiet and energy efficient operation, the fan should be a backward inclined airfoil type. It should be located at the clean air side of the collector and include a housing drain, access door and a V-belt drive for flexibility in performance.

Sound Control: The desired maximum sound level should be specified by the customer. Typically, fan discharge sound attenuation is required. A complete fan and motor enclosure with suitable access doors may also be beneficial.

Monitoring Equipment: The collector typically should include an hour meter, a motor amperage meter and pressure differential gages for each filter stage. Filter fault lights or alarms may be included. A more elaborate system may include a vibration monitor for the fan or a particulate monitor for the collector discharge.

Fire Protection: When metal working fluids have a low flash point, typically the mineral oils, a fire protection systems should be included for the collector. Plant, governmental and insurance requirements must be considered. Methods include using CO_2 and water suppression systems, isolating dampers and explosion relief doors.

6.5.5.3. Static Pressure. The required static pressure for the system must be determined for collector fan and motor selection. The external static typically ranges from 2 to 6 inches water column depending on the enclosure, duct velocity and number, length and arrangement of branches. If the discharge is to the outside, the stack loss must be included.

6.5.5.4. Collector life cycle costs. Initial cost, maintenance including filter replacement costs and energy costs should be considered to determine the overall cost over time.

Maintenance

Filters: Periodic filter replacement will be required for most collector types, especially if the exhaust is to be re-circulated. Ease of removing and installing new filters should be considered. Filter element costs can vary from one collector to another.

Fan and Drive: During operation, the fan and drive are the only moving components of a mist collector. Periodic greasing of the fan bearings is required.

Energy Costs: Fan motor electrical consumption should be considered. Pressure losses for collector types can vary considerably and correspondingly motor horsepower varies. The electrical cost is a relatively large factor in comparing collector types.

6.5.5.5. Collector Efficiency

The contaminated air stream may contain dust, vapor, smoke or mist. These components will be in varying concentration, which will effect the overall performance of the collector. Some designs do not handle dust well and will plug. Sub-micron oil smoke anticipated must be considered. Vapors are usually not removed by traditional mist collectors.

Typically, the efficiency requirement for discharging to outside the building is not as stringent as discharging inside. For example, a specifying engineer may require outside loading of a maximum of 0.3 mg/m^3 while inside discharge must be 0.1 mg/m^3 or less. Plant and governmental requirements must be considered.

6.5.5.6. Collector Location. Will the collector be mounted on a machine, on the floor, a platform or will it be on the roof? The collector equipment will have to be constructed to suit.

Table 6.9. summarizes the above discussion.

Table 6.9. Relative cost and performance comparison of oil mist collectors. Based on the data from [16, 28, 35]

Collector type	Separation efficiency	Energy costs	First Costs	Maintenance Costs	
Centrifugal separator	_	++	+	_	
Spiral separator	_	++	_	_	
Baffle plate separator	-	++	+	_	
Electrostatic filter	+	++	-	--	
Wet scrubber	_	-	-	++	
Metal wire mesh filter	+	+	+	++	
Cleanable fabric filter	++	-	--	_	
Cleanable granular-bed filter	+	+	+	+	
Disposable filters	++	_	++	-	
Legend	++ very good	+ good	_ acceptable,	- poor	-- unsatisfactory

References

1. Absolent AB. 1998. Oil-Mist Filter. Product Catalogue.
2. ACGIH. 1998. Industrial Ventilation. A Manual of Recommended Practice. 23 edition. American Conference of Government Industrial Hygienists. Cincinnati, OH.
3. ACGIH. 1998. Guide to Occupational Exposure Values – 1998. American Conference of Governmental Industrial Hygienists. Cincinnati, OH.
4. AFS 1996:2. 1996. Occupational Exposure Limit Values. The Swedish National Board of Occupational Safety and Health.
5. Ameille J, et al. (1995). Respiratory Symptoms, Ventilatory Impairment, and Bronchial Reactivity in Oil Mist-Exposed Automobile Workers. Am. J. Ind. Med. 27:247-256.
6. ANSI. 1997. Technical Report. ANSI B-11 TR 2-1997. Mist Control Considerations for the Design, Installation and Use of Machine Tools using Metalworking Fluids.
7. ASHRAE. 1999. ASHRAE Handbook. HVAC Applications. American Society of Heating, Refrigerating and Air-Conditioning Engineers. Atlanta, GA.
8. Burns, R.E., V.W.Harshfield, W.J. Johnston, R.C. Kramer. 1996. Costs of Oil Mist Control Installations. The Industrial Metalworking Environment. Symposium Proceedings. November 1995. AAMA.
9. Chemical Engineers' Handbook, 5th Edition. 1973. New York: McGraw Hill, p. 18-88
10. Cooper, S.J., D. Leith and D. Hands. 1998. The Industrial Metalworking Environment. Symposium Proceedings. September 1997. AAMA.
11. Eisen E.A. 1995. Healthy Worker Effect in Morbidity Studies. Medicina del Lavoro.
12. Eisen E.A. et al. 1992. Mortality Studies of Machining Fluid Exposure in the Automobile Industry I: A Standardized Mortality Ratio Analysis. Am. J. Ind. Med. 22:809-824.
13. Ford. 1998. Private communications with Mr. Michael Busch. Ford-Werke. Koeln-Niehl.
14. Ford. 1998. Powertrain Operations - Machine Enclosure Standard. Ford Motor Company.
15. Gannon, P.F.G., Burge, P.S. 1991. A Preliminary Report of a Surveillance Scheme of Occupational Asthma in the West Midlands. Br. J. Ind. Med. 48(9): 579-582.
16. Gores, St. 1997. Lufttechnische Gesamtkonzerpte für kühlschmierstaffbelastete Industriehallen. VDI Berichte 1326.
17. GOST. 1988. General Requirements to the Occupied Zone Air. GOST 12.1.005-88. Moscow.
18. Greaves, I.A., Eisen, E.A., Smith, T.J. et. al. 1995. Respiratory Health of Automobile Workers Exposed to Metal Working Fluid Aerosols. II: Respiratory Symptoms. Amer. J. Ind. Med.
19. Handte. 1997. Economical and Nonpolluting on Large Scale: Recovery of Oil and Emulsion Mist at Ford Werke. Private Communications.
20. Helical Dynamics, Inc. 1993. Heli-Flo System. Product Catalogue.
21. Hendy, M..S., Beattie, B.E, Burge P.S. 1985. Occupational Asthma Due to an Emulsified oil mist. Br. J. Ind. Med. 42: 51-54.
22. INRS. 1985. Guide for Ventilation Practice. Oil Mist Extraction and Processing. Vol.6. INRS, Paris.
23. International Agency for Research on Cancer. 1984. IARC Monographs on the Evaluation of the Carcinogenic Risks of Chemicals to Humans: Mineral Oils (Lubricant Based oils and Derived Products), Vol. 33, Lyon, France: IARC, pp. 87-168.
24. Johnston, W.J. 1998. Metal Removal Fluid Mist Control System Considerations. The Industrial Metalworking Environment. Symposium Proceedings. September 1997. AAMA.
25. Johnston, W.J. and D.W. White. 1996. Machine Enclosure Consideration for Oil Mist Control. The Industrial Metalworking Environment. Symposium Proceedings. November 1995. AAMA.
26. Kennedy SM et al. (1989). Acute pulmonary responses among automobile workers exposed to aerosols of machining fluids. Am. J. Ind. Med. 15:627-641.

27. Leith, D. 1998. Long-Term Performance of a Mist Collector. Proceedings of the Symposium “The Industrial Metalworking Environment: Assessment and Control of Metal Removal Fluids.” September 13-15, 1997. Detroit, MI.
28. Leith, D., P.C. Raynor, M. Boundy and S.J. Cooper. 1996. Performance of Industrial Equipment to Collect Coolant Mist. The Industrial Metalworking Environment. Symposium Proceedings. November 1995. AAMA.
29. Monroe Environmental Corporation. 1992. Product Catalogue.
30. Monson, R. et al. 1992. Final Report to GM-UAW Occupational Health Advisory Board on Health Effects of Exposure to Machining Fluids. Harvard School of Public Health, unpublished report. October 30, 1992 (OSHA Docket No. 372, Ex. No. 2-7A).
31. NIOSH. 1998. Occupational Exposure to Metalworking Fluids. Criteria for a Recommended Standard. US DOH.
32. National Air Filter Association. 1993. NAFA Guide to Air Filtration, First Edition.
33. Nisi, D. Entwicklung der Lufttechnik in Industriehallen mit mechanischer Fergung und Gießerei. VDI Berichte 1326.
34. OSHA. 1998. Metalworking Fluids. www. page.
35. Paul, H. 1997. Erfahrungsbericht über KSS in der Automobilindustrie. Aktuelle Entwicklungen in der zespanended und umformenden Industrie. Symposium'97. Keller Lufttechnik.
36. Perry’s Chemical Engineers Handbook, 6th Edition. 1984. Eds.: R.H.Perry and C.H. Chilton. New York. McGraw Hill.
37. Plymovent. 1998. Clean Fresh Air. Consultants Handbook. Industrial Products. Sweden: Plymovent AB.
38. Robertson, A.S., Weir, D.C., Burge, P.S. 1988. Occupational Asthma Due to Oil Mists. Thorax 43: 200-205.
39. Raynor, P.C. and D. Leith. 1998. Processes Affecting Performance of Mist Collection Filters. The Industrial Metalworking Environment. Symposium Proceedings. September 1997. AAMA.
40. Rosenman, K.D., Reilly, M.J. 1993. Annual Report on Occupational Asthma in Michigan. Michigan Department of Public Health, Bureau of Occupational Health, Lansing, Michigan.
41. Rotimi C, et al. 1993. Retrospective Follow-up Study of Foundry and Engine Plant Workers. Am. J. Ind. Med. 24:485-498.
42. Sprince, N., et al. (1994) Chapter 34, Oils and Related Petroleum Derivatives, in Textbook of Clinical Occupational and Environmental Medicine, Rosenstock, L. and Cullen, M.R., eds., Saunders, 1994.
43. Tolbert, P.E. et al. 1992. Mortality Studies of Machining-Fluid Exposure in the Automobile Industry II: Risks Associated With Specific Fluid Types. Scand. J. Work Environ. Health 18:351-360.
44. Turchan, M.C. 1996. Dry Machining: The Ultimate Solution. The Industrial Metalworking Environment. Symposium Proceedings. November 1995. AAMA.
45. VDI. 1997. Air Conditioning Systems for Factories. VDI 3802. VDI – Richtlinien. D_sseldorf: VDI.
46. Vena, J.E. et al. 1985. Mortality of Workers in an Automobile Engine and Parts Manufacturing Complex. Br J Ind. Med. 42:85-93.
47. VVS. 1997. Olieudskillere. Industrie-Ventilation. VVS danvac special. No. 7. Teknisk Forlag A/S.
48. Woody, A. 1997. Ventilation Systems Applied to Automotive Manufacturing. Proceedings of the 5th International Symposium on Ventilation for Contaminant Control "Ventilation'97". September, 1997. Ottawa.

Appendix 1. Machine types.

Various machines are defined by their transport style such as:

Pallet Transfer - These machines clamp a part into a fixture that is moved through the machine using push bars, conveyors, etc.

Lift and Carry - These machines lift the part out of fixed fixtures at each station and transfer it to the next station where it is lowered into the next fixture and clamped into place.

Dial Transfer - These machines use rotary tables with the work stations located either on the outside or inside of the turning table. The parts are loaded into fixtures that move as the table moves from station to station. Often the load and unload stations are the same station and often these machines are manually loaded since parts are usually smaller.

General Use Machines - These machines are designed to perform a specific operation and are either manually operated or have some type of computer controls.

Turning Machines - These machines use sharpened steel or carbide tools and apply them from a tool holder mounted on a movable machine component (saddle) to a turning part. Lathes are classified by their size (swing and stroke), whether the saddle moves horizontally or vertically, and whether they are manual or CNC controlled. Manual lathes are often further classified as standard, engine, or turret types. CNC machines often carry a designation of HTL or VTL (horizontal or vertical turning lathes or centers). Screw machines are also turning machines that feed bar stock into the machine and cut it off from the bar after the part is machined.

Machining Centers

Milling Machines - These machines hold the part on a movable table and use a rotating tool to cut the part. They are classified by the table and spindle maximum strokes (part envelope), vertical or horizontal movement of the spindle, and manual or CNC controls. Manual machines, (milling machines) are typical found in tool-rooms for non-production applications and are usually very open.

Gear cutters are a type of automated milling machine.
CNC machines (machining centers) are usually enclosed around the perimeter but often open on the top to allow for movement of the table relative to the spindle. Machining Center manufacturers use different designations but often refer to their machines as VMC's or HMC's (vertical or horizontal machining centers).

Grinders - These machines all apply a high speed rotating abrasive wheel to a slower moving part to remove material by gouging out small pieces of the part with the imbedded grit particles in the wheel. These machines are classified by the type of surface they are grinding, the orientation of the

wheel, and whether they have manual or CNC controls. Several different types exist:

OD Grinders - remove material from the outside diameter of a rotating part. These can be center or center-less type machines.

Center machines hold the part in a chuck and rotate it with the wheel applied to the outside.

Center-less grinders wedge the part between the grinding wheel and a regulating wheel that is set at a specific distance from the grinding wheel.

These machines can be either through feed or plunge type. In through feed the part simply rotates and works its way along the slightly angled grinding wheel and falls out the back-side of the machine.

In a plunge grinding application the part likely cannot be feed through because of its configuration, so it is held in place with a stop and the grinding wheel turns and abrades it to size.

ID Grinders - remove the material from the inside diameter of a part. These wheels are generally mounted on a mandrel and spin inside the part to size it, Jig Bores are a special type of ID grinder.

Surface Grinders - typically hold the part on a movable table and apply a fixed position wheel in intermittent strokes of the table. Often these are manual machines used for gang machining of like parts.

Rotary Grinders - use a rotating table to move the part under and out from under a horizontally mounted grinding -wheel.

<u>Tool Cutter</u>

Grinders - are grinders designed for multiple axis work on a part and are generally used for making cutting tools.
Flute grinders are a special tool cutter grinder designed for flute work.

Form Grinders - are grinders that have a specific form designed into the wheel. They can be OD, surface, or tool cutter types.

Broaching,
Hobbing,

Sawing - These operations used toothed tools for lower speed metal removal applications where the tool is passed over the part and cuts its way through. These operate at relatively lower speeds.

Non-Traditional Machines - These are machines that perform metal removal or metal forming operations in a non-traditional way.
These include Electrical Discharge Machines (EDM's), polishers, brushes, burnishers, knurling machines, and Water Jet Machining.

Forming Machines - These machines shape the part by forcing the material into some type of die or mold. Again, both special purpose machines and general use types are common. Often these machines are grouped in a line or cell configuration in order to do several different operations on the same part.

Hot Forging Machines - These machines stamp hot material into a series of forming and/or trim dies. Since this is high temperature operation, there is a lot of mist generated. Some is from the parting fluid used to keep the part from sticking in the die.
Often a secondary operation is used to quench the hot part for easier handling or to improve the material characteristics.
This is a high mist generator, but can present plugging problems with the higher temperatures and the possibility of burnt insoluble particles.

Cold Forming Machines - These machines take the material at its ambient temperature, and force it into dies that gradually shape the part to the finished design. There are several types of these machines.

Stamping Presses - form flat sheets of material into various shapes. They also use a separating fluid and can produce smoke and lower quantities of mist.

Cold Headers - are a special type of forming machine that makes smaller parts from a wire stock material. The wire size can be either compressed into a smaller or different configuration. Mist and smoke generation is high due to the temperature increase in the cold working of the material and the high speed of the rams

.

Bolt Makers - are a special type of cold header that combines traditional machining with the cold forming technology.

Appendix 2. Enclosures*

MACHINE TOOL ENCLOSURE – wet operations

A system of totally enclosing the machining operations with fixed and removable panels, automatic doors, and minimal fixed openings, to contain metal working fluids and mist being generated during the machining operation.

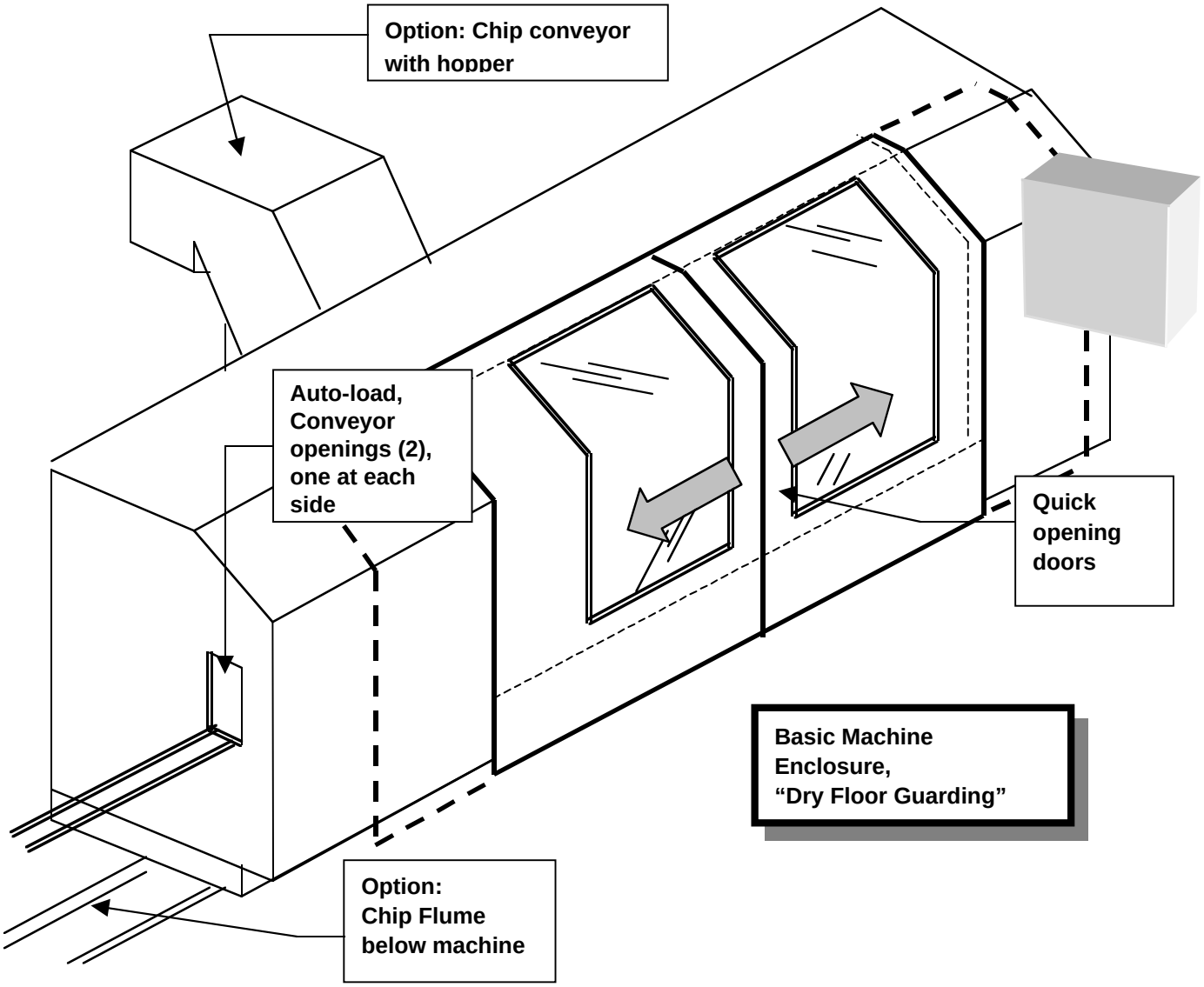

* **Graphs, courtesy of SSOE, Inc.**

MACHINE TOOL ENCLOSURE – wet operations

The machine enclosure shown on the previous page represents the base enclosure provided by the majority of the machine vendors. This enclosure is not complete, various modifications are required which will make it contaminate control capable.

For this enclosure to work properly, a controlled flow of air through the enclosure is required. The enclosure alone will not control mist or dust.

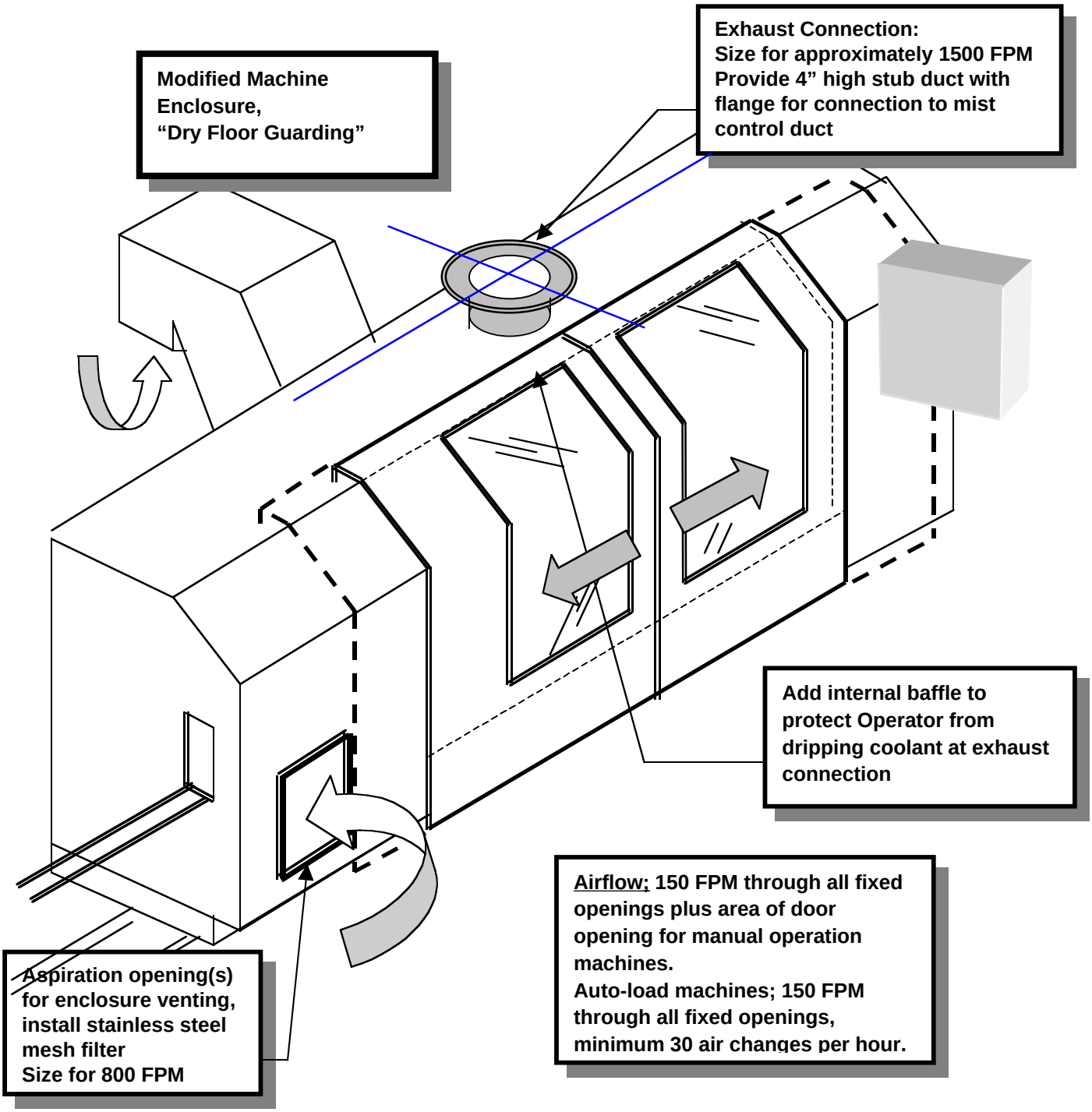

MACHINE TOOL ENCLOSURE – wet operations

Side View

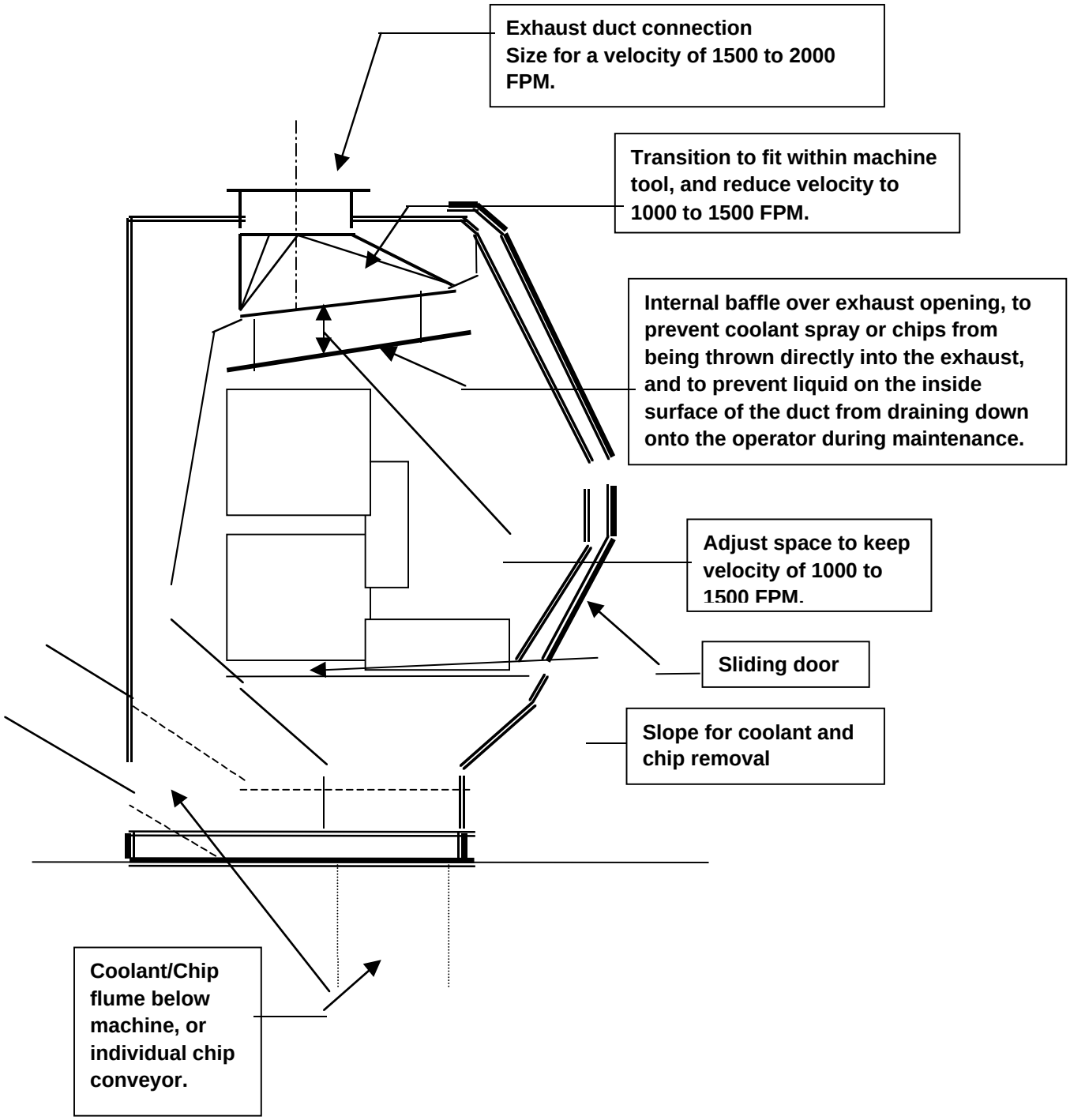

MACHINE TOOL ENCLOSURE – wet operations

ASPIRATION OPENINGS

Exhausting air from a closed container, or a closed enclosure, will not work.
For an enclosure exhaust system to operate, the enclosure must be able to aspirate, or bring air in, so that it may be exhausted.

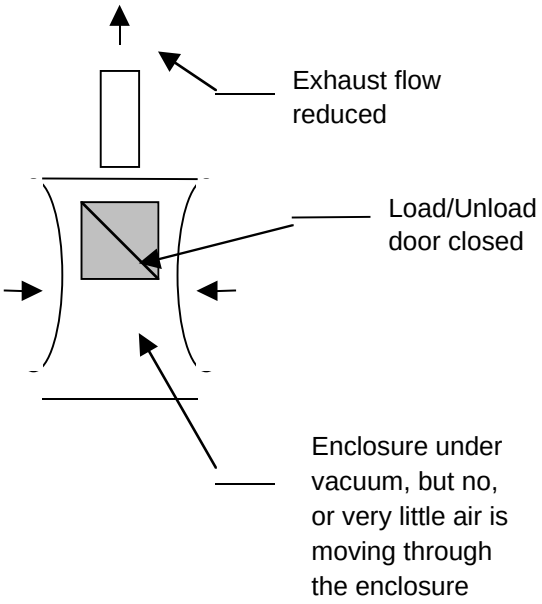

Mist is being generated faster than the reduced air flow can evacuate the enclosure, and concentration levels are increasing.

When the Load/Unload door is finally opened, a momentary “Puff” of mist will escape, directly towards the operator.

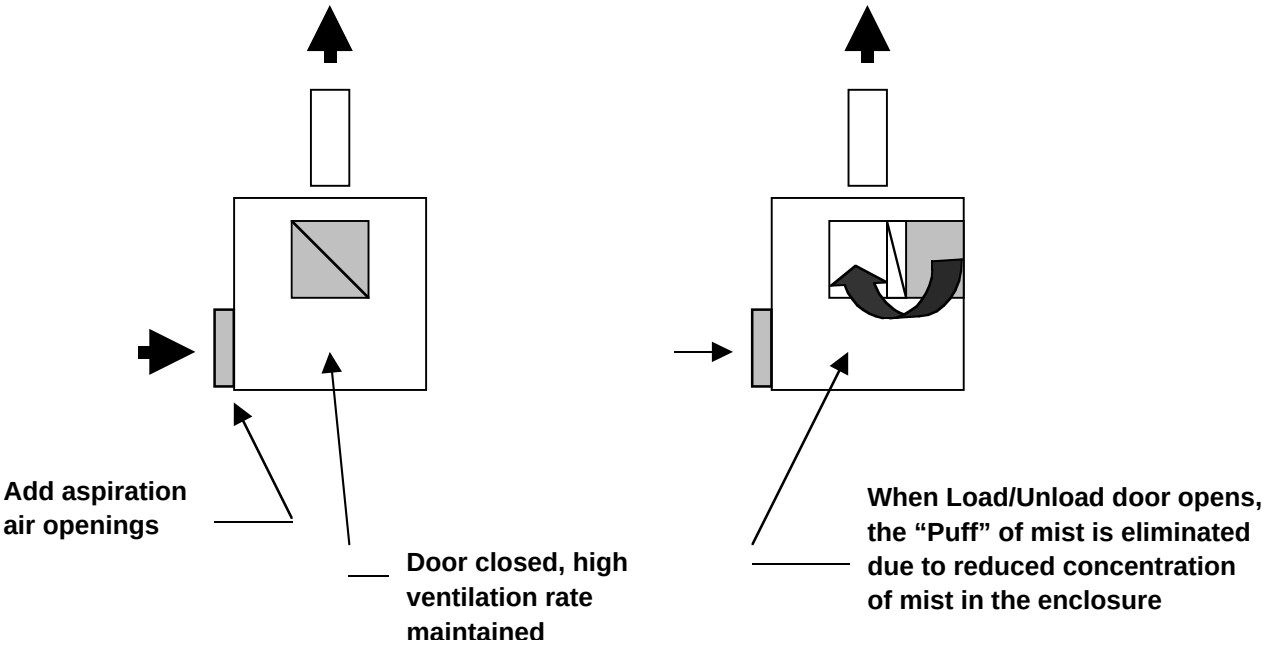

ENCLOSURE – wet operations

ASPIRATION OPENINGS, continued

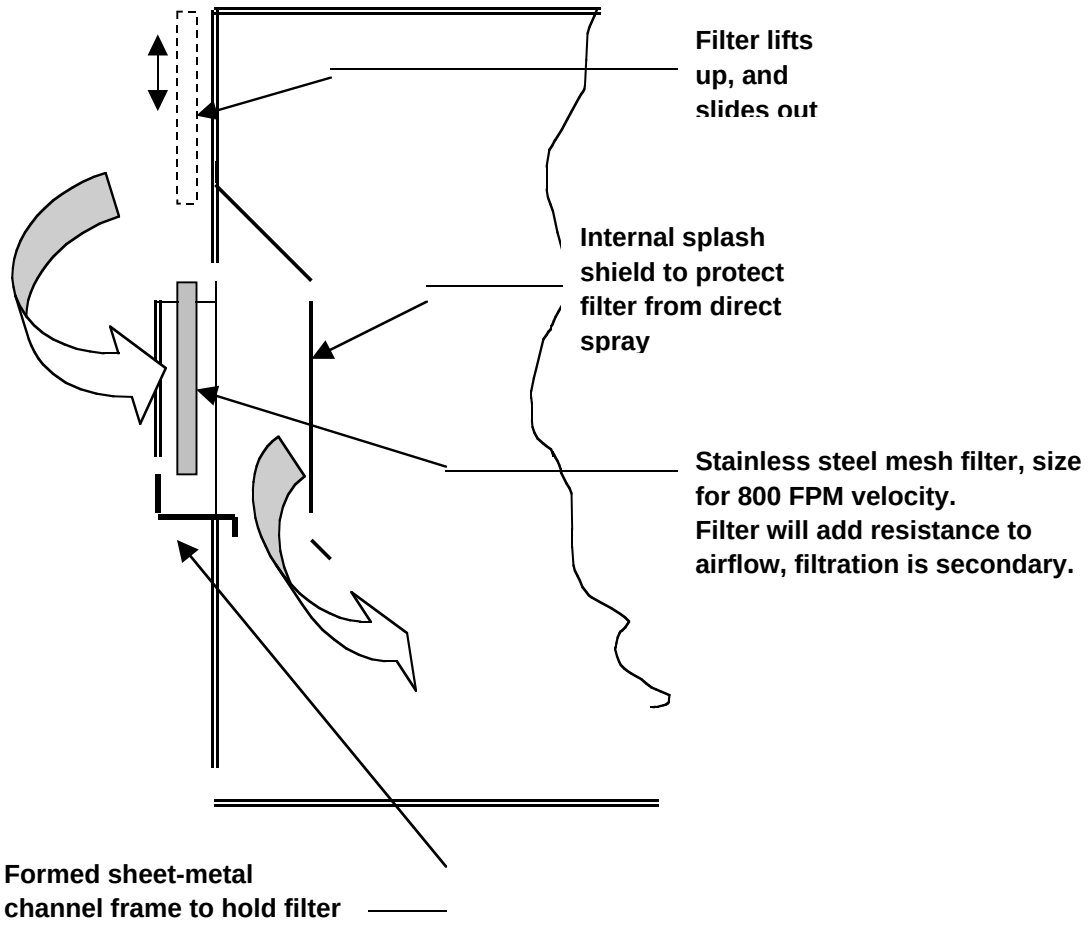

With the filter sized at 800 FPM, for the machine exhaust air flow, a slight pressure drop allows a small reduction in system flow when the Load/Unload door is closed, and assures that when the Load/Unload door is open, all replacement air will be pulled through the Load/Unload door.

MACHINE TOOL ENCLOSURE – wet operations

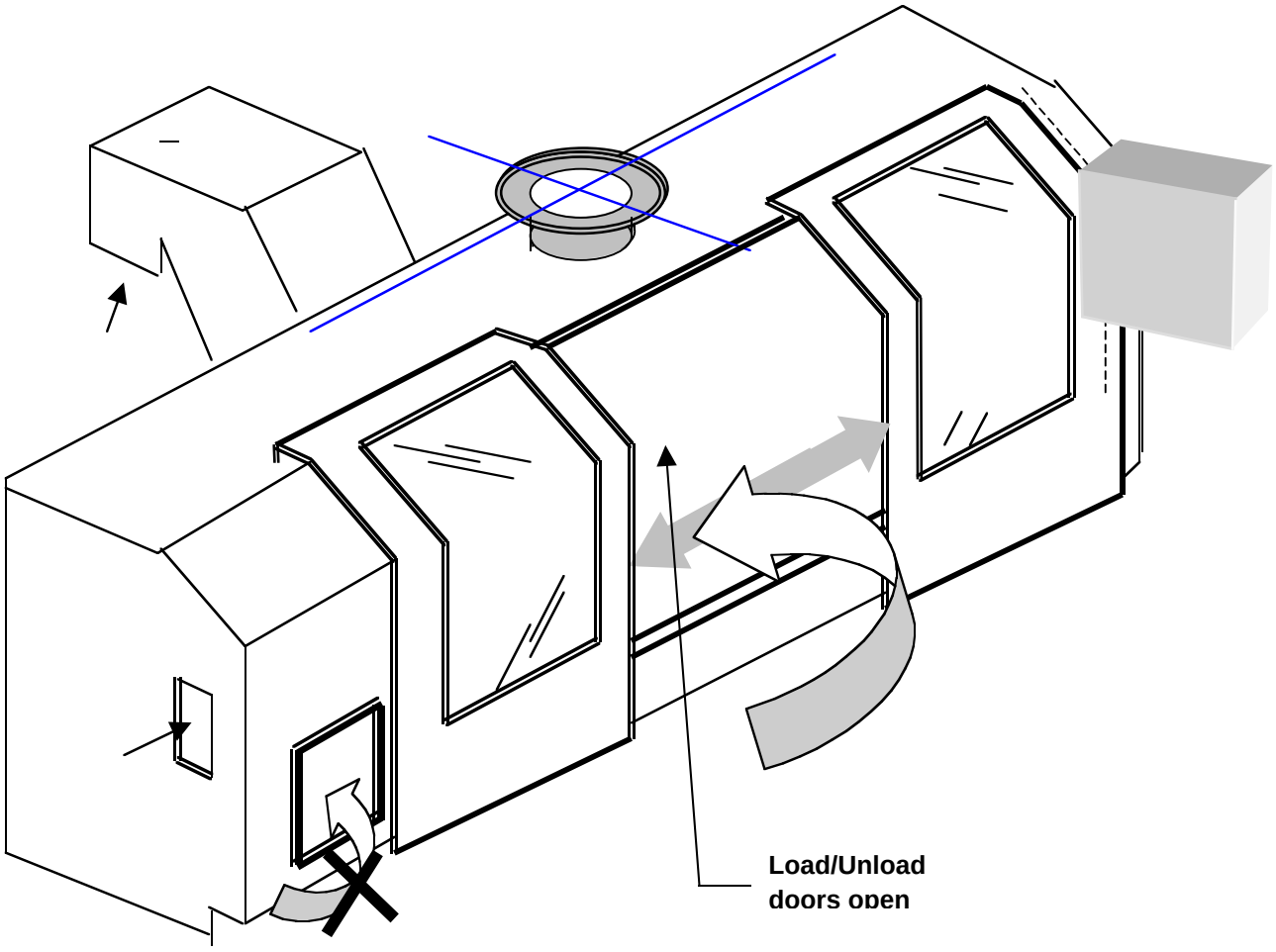

MACHINE TOOL ENCLOSURE – wet operations

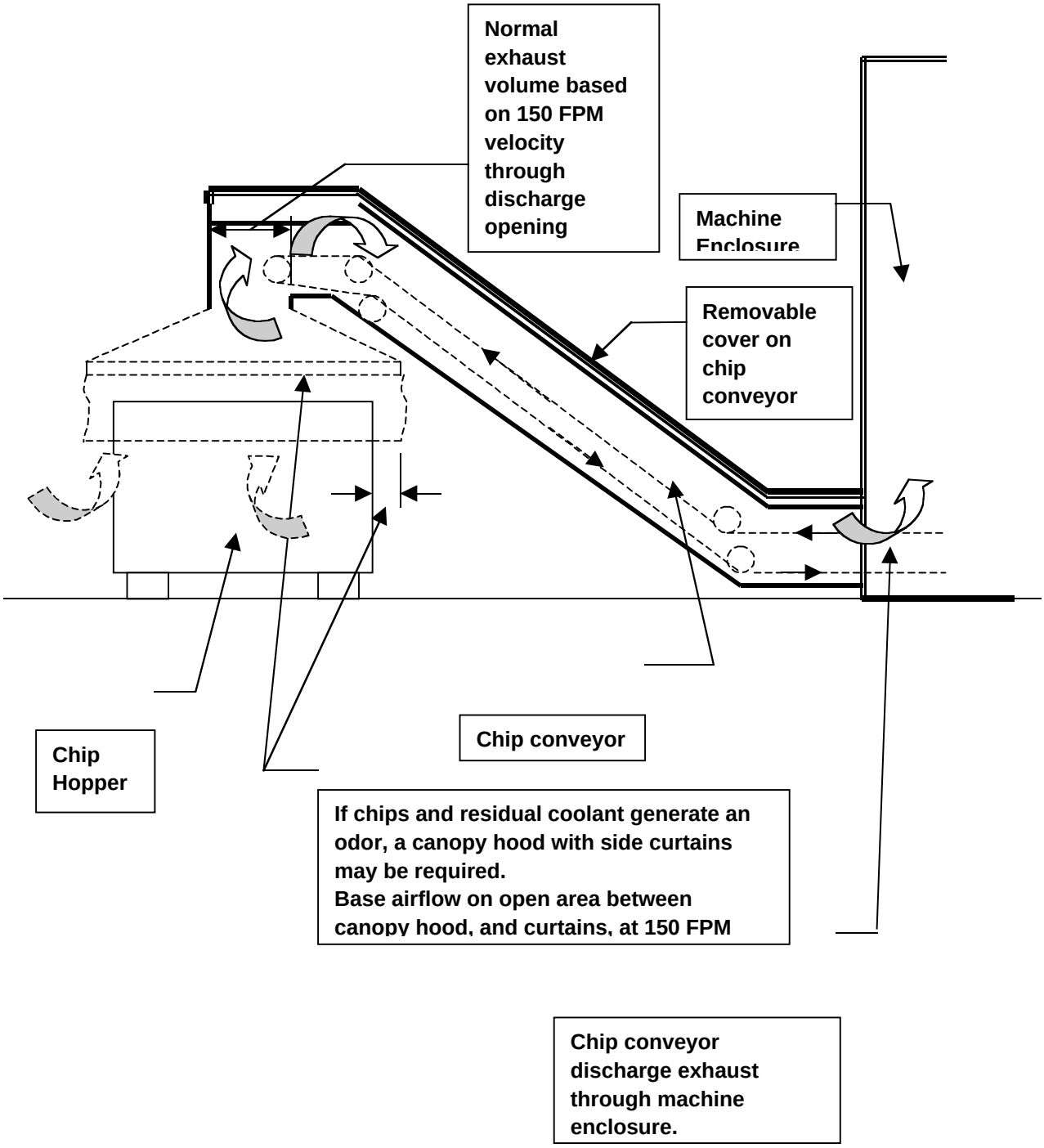

MACHINE TOOL ENCLOSURE – wet operations

Excel spreadsheet for determining enclosure airflow

Machine I.D. Number:								
Machine Manufacturer and Type:								
	insert data			**insert data**				
Door Size:	44	**inches**	**X**	12	**inches**	**=**	3.67	**square feet**
Chip Chute Size:	20	**inches**	**X**	20	**inches**	**=**	2.78	**square feet**
Conveyor Opening Size:	0	**inches**	**X**	0	**inches**	**=**	0	**square feet**
Misc. Openings:	0	**inches**	**X**	0	**inches**	**=**	0	**square feet**
Total:							6.44	**square feet**
Exhaust rate:	6.44	**sq.ft.**	**X**	**150 fpm ***		**=**	967	**cfm**
Enclosure Interior Volume:								
inches:	72	high	**X**	32	deep	**X**	90	wide
equals:	1440	**cubic feet**						
Minimum airflow rate, 30 air changes per hour =							720	**cfm**
			DESIGN AIRFLOW =				967	**cfm**
Aspiration air flow rate:							550	**cfm**
Aspiration air opening size:			(based on 800 fpm)				0.69	**sq.ft.**
							10	**inches square**
Minimum nominal filter size:							12	**inches square**

MACHINE TOOL ENCLOSURE – wet operations

Automatic Pallet Machines, (Transfer Line)

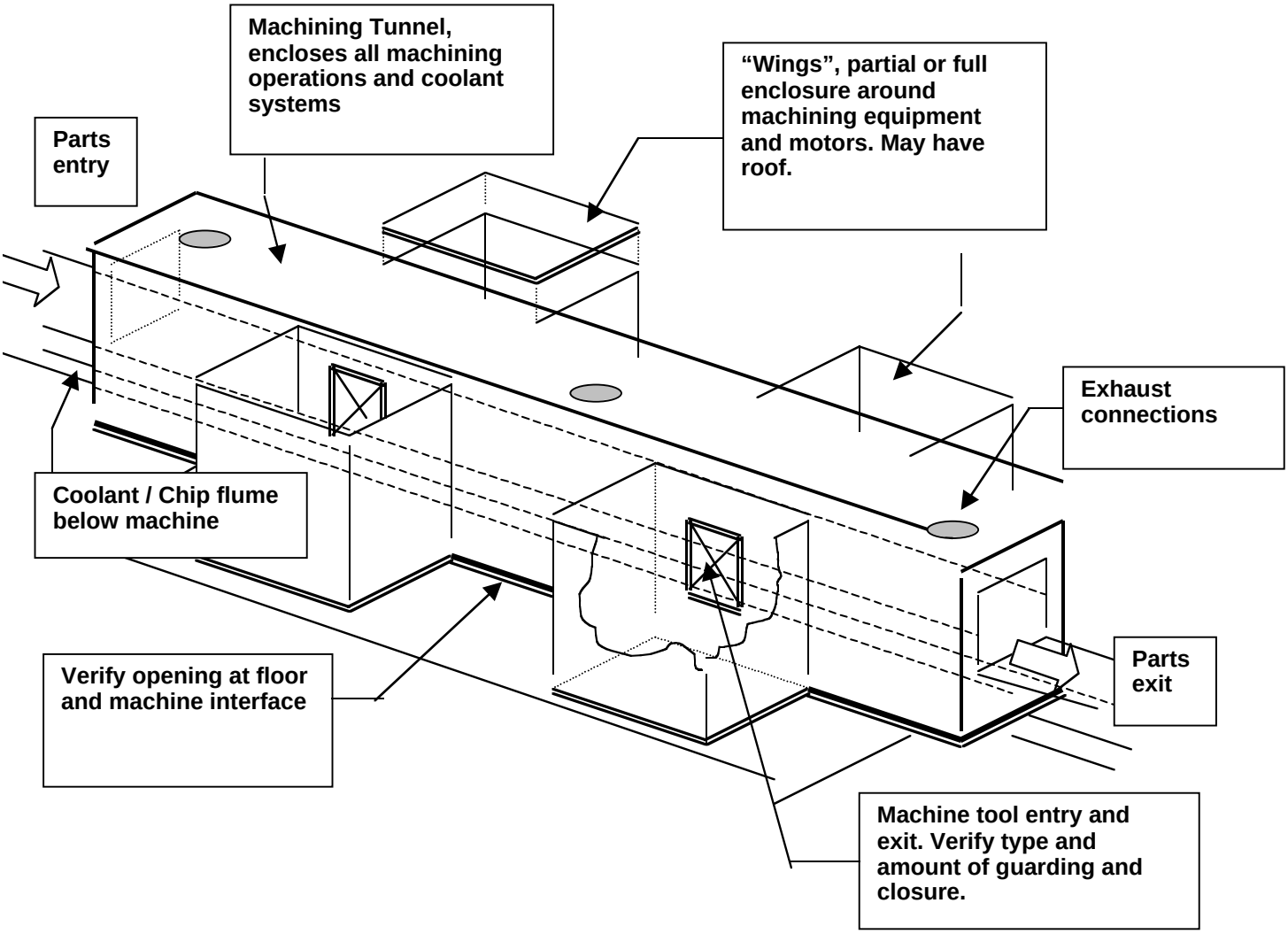

The Automatic Pallet Machine, or Transfer Line, is a series of machines and machining operations which are grouped into one continuous line or "machine", with the parts being machined moving through the operations, station by station, on a moving pallet.

The machine will consist of a number, (30 to 40 is not unusual), of stations, some being machining stations and others being idle, or used for part orientation changes. All of these stations are connected by one continuous tunnel, which serves as the "Enclosure".

MACHINE TOOL ENCLOSURE – wet operations

Automatic Pallet Machines, (Transfer Line)

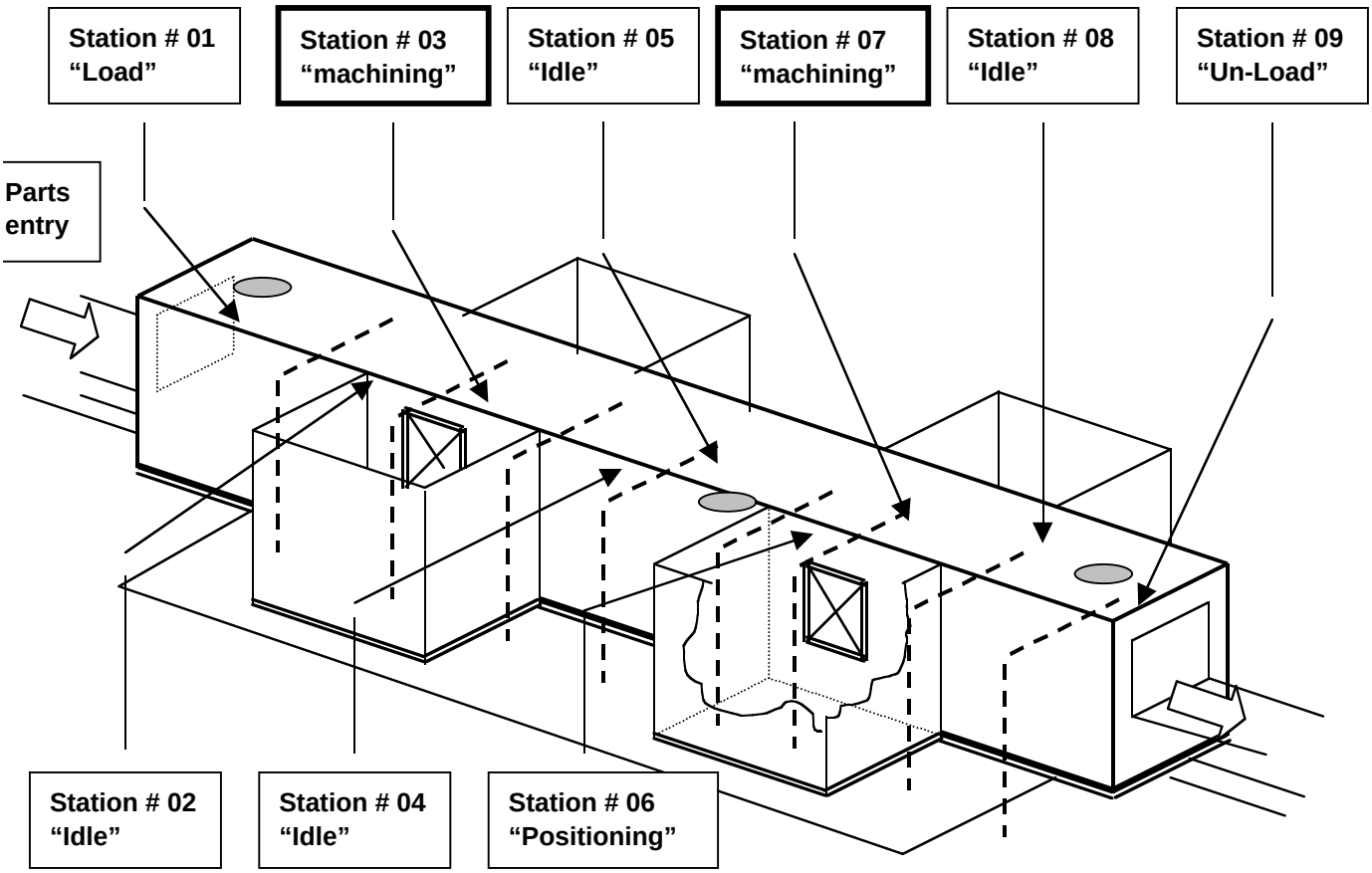

The enclosure will be kept under negative pressure by ventilation systems. The exhaust airflow rate must be sufficient to prevent contaminants from escaping from the enclosure. The design of the enclosure should prevent short circuits of incoming air to the duct system without affecting the collection of contaminants.

Care should be exercised in the selection of the duct connection location to prevent chips and coolant entry. The intent is to only collect light contaminants and keep the enclosure under a negative pressure.

Enclosures should be designed with tapered duct entry in order to minimize duct entry velocity and losses. Design the enclosure with internal chip or spray baffles, if required, to contain over-spray.

High velocity duct entries or the location of baffles that would restrict duct take-off area, and create the same affect as a high velocity duct entry should be avoided because they may entrain of chips and coolant into the duct system. Suggested duct entry velocities would be approximately 5 m/s (1000 fpm) or less for materials such as cast iron steel or aluminum. Lower velocities may be required for less dense material such as plastic.

Enclosure inlet velocities recommended to contain mist within the enclosure, may vary from 0.5 m/s (100 fpm) [16] to 0.75 m/s (150 fpm). [24]

The enclosure design and extracted airflow rate must consider the heat that may be added from the process and motors located in the enclosure. Additional heat can have a contributing effect on the coolant mist and vapors. Replacement air may be used to reduce air temperature under the enclosure.

If the machine contains electrical, laser or other susceptible equipment, consideration must be given for the environment they occupy (dust, mist and heat). It is preferred to design the system with this equipment outside the enclosure.

MACHINE TOOL ENCLOSURE – dry operations

As stated earlier, the design rational for dry operations is opposite that of the wet operations. With dry operations, the requirement is total capture and transport of the contaminant. The machine enclosure designed for wet operations will contain the dry contaminant, (dust), being generated, but will not capture or transport the contaminant away from the tool, or the enclosure. Dry operations will require higher velocities, capture and transport, than wet operations.

The ACGIH, Industrial Ventilation Manual [2], provides reliable guidelines for both capture and transport velocities for dry operations. The use of a properly designed enclosure, along with interior mounted "close capture hooding" will result in system, which will work for dry operations.

"Close capture hooding", what is it?

> "A hood is a device, located behind, beside, above, or below the machining operation, that induces air flow to capture the emissions, and pull them away from the source."

Simple "Close Capture Hood":

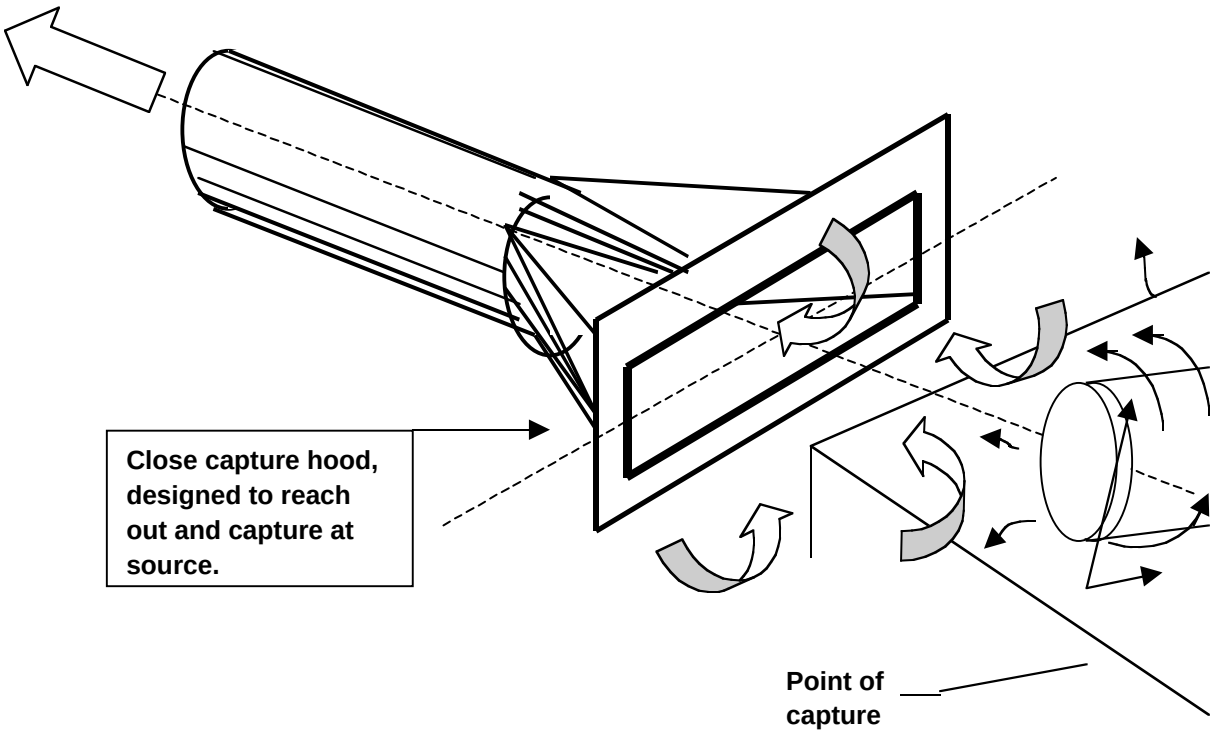

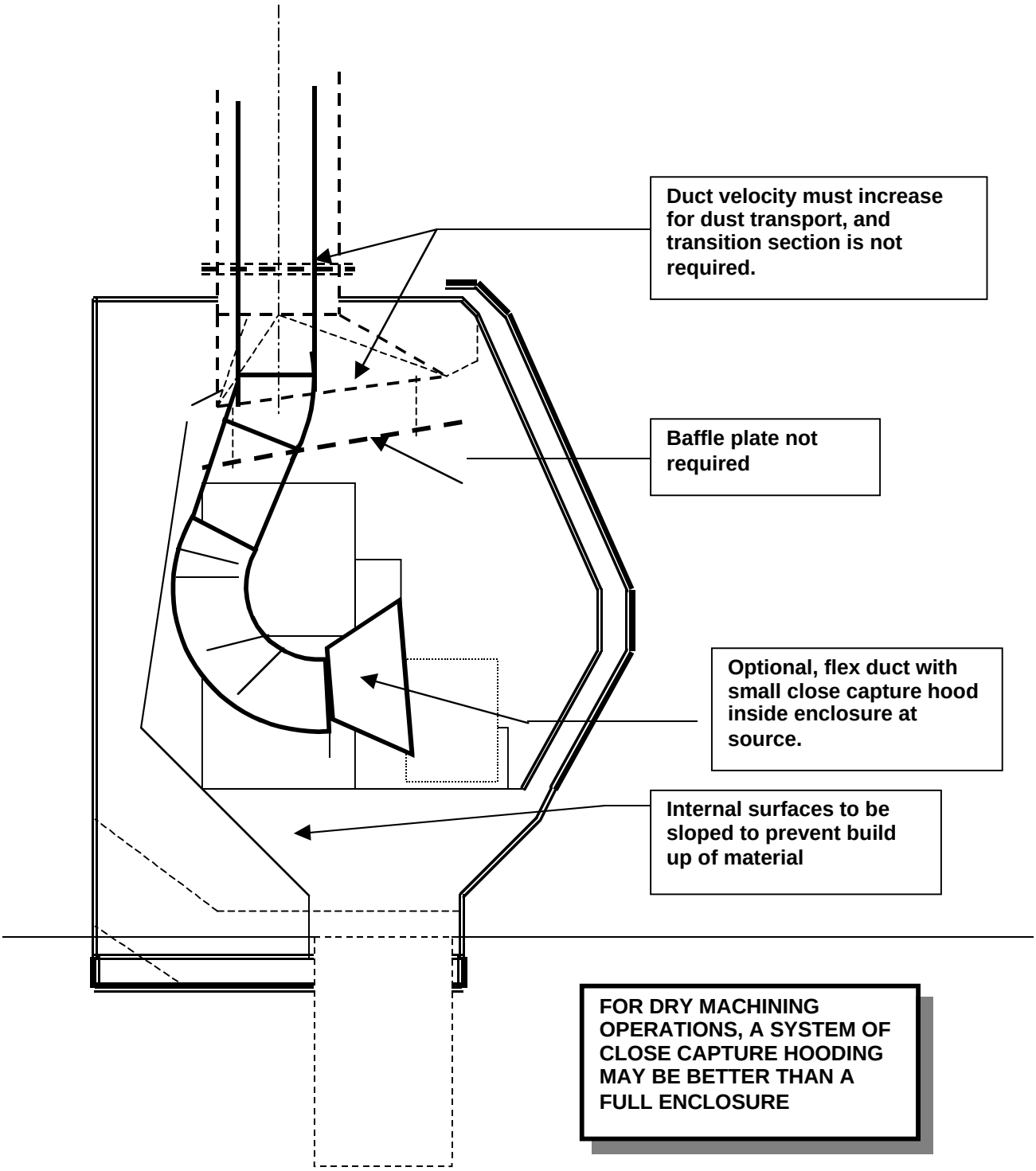

DRY OPERATIONS

For dry machining operations, a system of close capture hooding may be better than a full enclosure. When close capture hooding is properly designed and installed, the necessity of a full enclosure is gone. In fact, the enclosure may hamper, more than help the control of contaminants due to restriction of space available to install hoods.

HOOD TYPES

Enclosing Hoods

Enclosing hoods are those which completely or partially enclose the process or contaminant generation point.

Exterior Hoods

Exterior hoods are those which are located adjacent to an emission source without enclosing it.

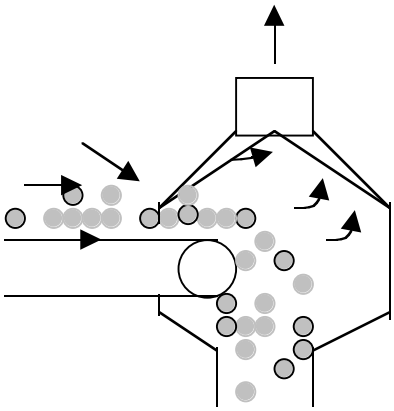

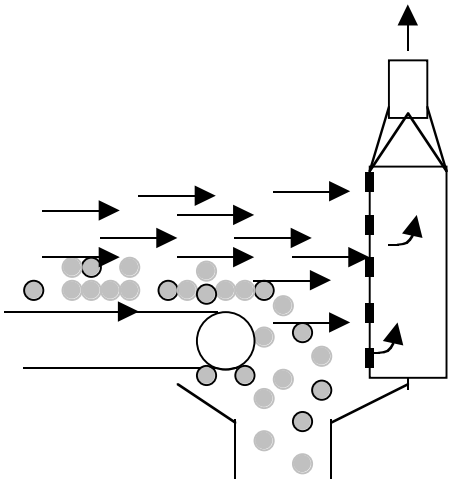

Nomenclature

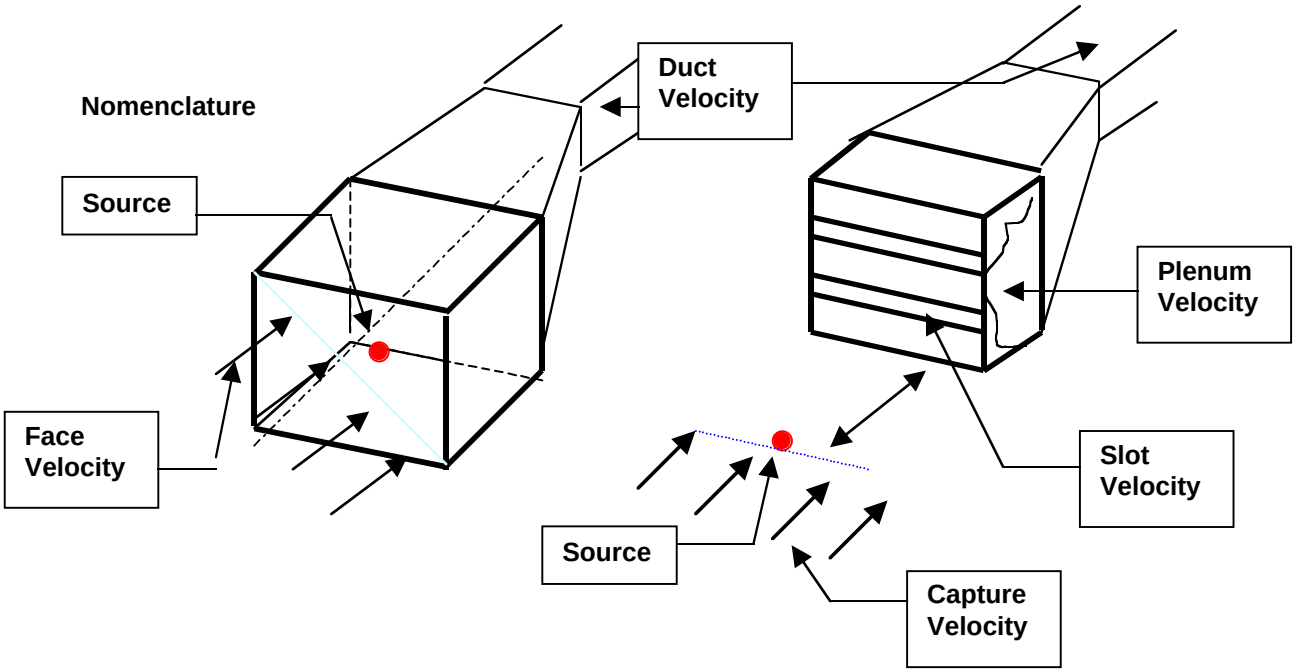

CAPTURE VELOCITY

The hood induced air velocity necessary to capture and convey the contaminant from the source to the hood.

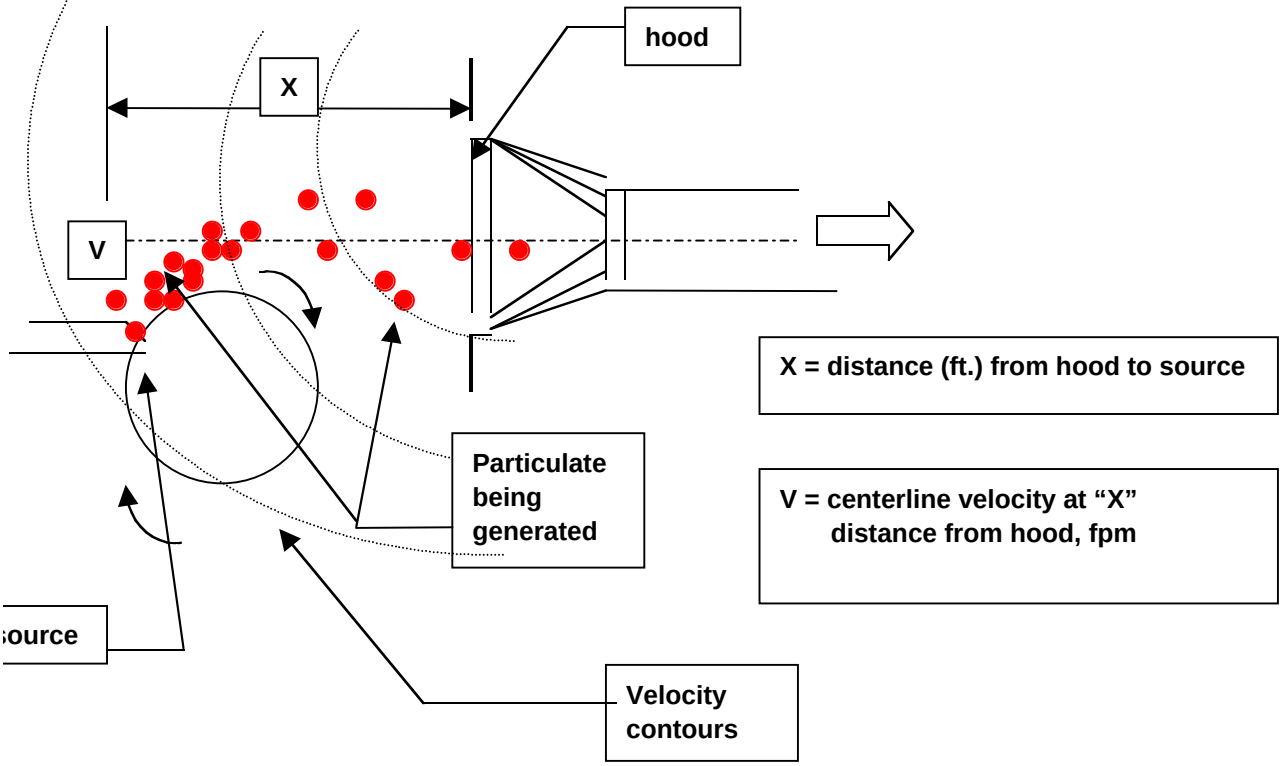

CAPTURE VELOCITIES

Type of release	Example	Velocity, fpm
No velocity into quiet air	Evaporation from tanks	50 – 100
Low velocity into moderately still air	Spray booths, welding, plating, low speed conveyor transfer, intermittent filling	100 – 200
Active generation, rapid air motion	Barrel filling, shallow spray booths, crushers conveyor loading	200 – 500
High initial velocity, very rapid air motion	Grinding, tumbling, abrasive blasting	500 - 2000

TRANSPORT VELOCITY

Transport velocity is the air velocity required to lift particles off the duct surface, and keep them entrained within the air stream. Refer to Chapter 12 for duct design recommendations.

DUST COLLECTION SYSTEM

The dust collection system shall be designed to move the dust collector away from the hot gas and smoke cutter discharge and therefore prolong the dust collector filter life.

Dust and chips from the dust collector are discharged from the collector hopper through a screw conveyor and rotary air lock (Figure 6.20). The rotary valve is used for a fine dust and mild chips.

Appendix 3. Approximate airflow rates to be extracted from machines.

Airflow rates to be extracted from metal cutting working machines typically depends upon the following factors:

- type of metal cutting machine (turning, gear cutting, shaving, grinding, honing, broaching, debarring, etc.)
- type and size of machine enclosure
- number and size of the openings in the machine/machine enclosure;

Airflow rates to be extracted from each machine should not be received from vendors. While the machine vendor is the expert in providing the machine to do a specific operation, that same vendor may not be the expert in contamination control design. The data presented in Table A6.1 and Table A6.2 may be used for preliminary mist control system selection and dimensioning. The data presented in Tables A6.3 through A6.7, or the procedures shown in Appendix 2, may be used for more detailed system design. However, airflow rates extracted from each enclosure might need adjustment after machines are in place and operated.

Extraction Airflow Rates for Transmission Plants

The following airflow rates exhausted by oil mist control systems could only be applied for Transmission Plants or machines producing transmission parts. The numbers are based on the practices from the Ford Transmission Plant in Cologne.

Three major production areas:
- Green area (turning, gear cutting, shaving, deburring)
- Hardening area
- Hardened (grinding, honing)

Table A6.1. Approximate airflow rates extracted by oil mist control systems at transmission production plant areas (to be used for preliminary system selection and dimensioning). [13]

Area	Extracted air flow rate per square meter of floor space, m^3/h per m^2
Green area	~15
Hardening area	~100
Hardened area	~20

Table A6.2. Approximate airflow rates extracted by oil mist control systems from major operations at transmission production plant areas (to be used for preliminary system selection and dimensioning).[13]

Operation	Extracted air flow rate	
	per machine, m3/h	per square meter of floor space, m3/h per m2
Turning	1500	~30-35
Gear cutting	2000	~50-60
Shaving	1600	~50-60
Grinding	800-2000	~50-60

Example 1. Green machining.

- floor space (total):18.000 m^2
- local extraction airflow rate (total): 280.000 m3/h
- local extraction airflow rate per m^2:

280,000 m3/h : 18,000 m^2 = 15 $m^3/(h^* m^2)$

Example 2. Turning area.

- floor space (total): 48m x 24m ~ 1.150m2
- number of machines: 25
- local extraction airflow rate (total): 25 * 1.500 m^3/h = 37.500 m^3/h
- local extraction airflow rate per m^2:

37,500 m3/h : 1,150 m^2 = 32 $m^3/(h^* m^2)$

Approximate airflow rates to be extracted from metal cutting machines (for oil mist control system sizing and duct design):

Table A6.3. Based on the vendors data and the data from Ford Transmission Plant in Cologne. [13]

Machine type	Vendor	Extracted airflow rate, m3/h
Turning M/C gears	Emag Pittler Weisser	**1500***
Turning M/C shafts	GF Emag	1500
Gear cutting (gears/shafts)	Pfauter	1800-2000
Gear cutting (ring gear)	Pfauter	2500
Shaft grinding machine	Fortuna Schaudt	2500-3000
Shaving M/C (gear/shafts)	Hurth	**1600***
Shaving M/C (ring gear)	Hurth	2200-2500
Gear grinding	Kappa VAS 531	**1000-1200***
Gear grinding	Receiptor	1500
Gear grinding	Fossler	800-1000
Gear grinding (gears)	Buderus	1200-1500
Gear grinding (ring gear)	Buderus	1500-2000
Gear grinding (ring gear)	Reinecker	2000-2500
Broaching M/C	Klinck Forst Varinelli	1500-2000
Deburring M/C	Hurth Praewema SU	1000-1500
Casing M/C	Ex-Cello	1500-2000
Drilling/thread cutting M/C	Lindemaier Vogland	2000-2500

Table A6.4. Approach suggested by Jacob Handte & Co. GmbH. [13]

Machine enclosure volume, m3	Required extracted airflow rate, m^3/h
up to 2	1000 -1200
2 to 4	1600 - 1800
over 4	2000 - 2500

Table A6.5. Approach suggested by Keller Lufttechnik GmbH. [13]

Machine size	Required extracted airflow rate, m3/h
Smaller machines (< 3 m3)	500 x Machine Enclosure Volume
Big machines (> 3 m3)	300 x Machine Enclosure Volume

Extraction capacities for transfer lines

Table A6.6. Approximate airflow rates extracted by oil mist control systems from transfer lines (to be used for preliminary system selection and dimensioning) Source: Daimler – Benz. [33]

Operation	Extracted airflow rate, m^3/h			
	partly enclosed line		totally enclosed line	
	Per meter of Transfer line	per station	per meter of transfer line	per station
Milling	480-720	1200-1600	320-480	800-1100
Turning	430-650	1200-1600	290-440	800-1100
Grinding	420-630	1100-1650	310-470	800-1100
Drilling/honing	380-570	1000-1500	230-350	600-900
Threading	300-450	1000-1500	180-270	600-900
Grating	300-450	1000-1500	180-270	600-900

Table A6. 7. Approximate airflow rates extracted by oil mist control systems from enclosures (to be used for preliminary system selection and dimensioning) [24].

Stand-alone machine	In-line transfer machine	In-line transfer machine handling large parts (engine blocks, transmission cases)
1020 m^3/h	560 m^3/h per linear meter + 170 m3/h per each entry or exit opening	840 m^3/h per linear meter

Appendix 4. Coolant types.

Metalworking fluids are needed to create a matrix between the work piece and the tools to improve machine finish, increase tool life by reducing friction, cool the tool to prevent overheating, inhibit corrosion and aid in chip removal. Metalworking fluid can be applied to any liquid that flows over or is sprayed on a piece of metal while the physical configuration is being changed either by tapping, cutting, grinding, honing, broaching, drawing, or rolling.

Metal working fluids (coolants), used to cool and lubricate the tool and work piece being machined or ground, are complex mixtures. Characteristics of the various fluid types are as follows:.

- Straight Oil is non-diluted mineral-based oil that has excellent low speed, low clearance operations requiring high surface finish. They heat up quickly and have a high tendency to mist.
- Soluble oil concentrate is 60 - 90% mineral oil base with extreme pressure additives, corrosion inhibitors and emulsified additives. Soluble oil is a high water based emulsion that offers good lubrication and cooling capability. A typical mixture is 90 to 95% water.
- Synthetic fluid contains no mineral oil and has a high water content with corrosion inhibitors, surfactants and extreme pressure additives. Their use ranges from grinding to moderate/heavy machining operation if synthetic lubricants are present. They offer good corrosion control with better cooling capacities and other fluids.
- Semi-synthetic is usually a combination of the above - thus, the terminology semi-synthetic. The concentrate will have 2 - 30% soluble oil. They offer good lubrication for moderate to heavy machining applications and better cooling and wetability than soluble oils.

As can be seen the oil comes from two types - mineral and synthetic. The mineral oils are napthenic and paraffinic hydrocarbons refined from crude oil. Synthetic oils are hydrocarbon based, poluglycol or ester oil poloalphaolefins. Major additives to these solutions include the following:

- Emulsifiers - stabilizes coolants by preventing oil droplets from coalescing
- Corrosion inhibitors - alkaline and alkanolamine salts to inhibit oil evaporation
- Polar additives (various oils) - to reduce friction and improve wetability
- Extreme pressure additives - chloride, phosphorus and sulfur compounds to reduce welding of metals during heavy machining
- Biocides - to control bacteria, fungi, yeast and mold

All coolants require a proper balance of their additives and the control of foreign elements for good performance and minimal generation of air contaminants. Water hardness can be a problem with the soluble oils since the emulsion can split forming a precipitate that can collect on parts and clog filters.

Immiscible liquids are obvious contaminants in coolant. Water may be undesirable in an oil lubricant just as foreign oil (tramp oil, which is any foreign undesirable oil, grease or floating contaminant found in a water base coolant) harms the performance of water base coolants.

Tramp oils in many water base coolants are in the system because of hydraulic leaks and the accumulation of lube oils or protective oil films carried in on raw materials. Also, oils or chemicals can be carried over from the previous operations. In addition, there are other types of floating contaminants, such as graphite in cast iron alloys and metallic soaps (“scum”) generated with varying degrees of efficiency, depending upon the application. Inverted emulsions are another type of contaminant found floating on the surfaces of a reservoir. An inverted emulsion is an oil particle, which surrounds a water particle that is not totally mixed in the emulsified state. The oil particle will pick up debris and contaminants from the system and appear as a black, oily gel. These are often mistaken for tramp oil.

Tramp oils can be controlled by centrifuges or other separating devices and efforts should be made to keep the concentration below five percent.

Some synthetic and semi-synthetic coolants use amines. Amines are known to cause headaches. Verify if the coolants have amines. A good source for this is the MSDS sheets. If a secret indigent is used, a call to the coolant manufacturer should answer the amine question, and any other questions that may arise.

Soluble oil (typically 95% water, 5% oil emulsions) and other coolants, including those containing lard oil, tallow, kerosene, and sulfur are subject to producing bacteria initiated odors, requiring periodic or continuous biocide application. The biocide itself, can be vaporized and become objectionable/sensitizing to people. There are many types of bacteria found in industrial coolant systems

The MSDS sheets for the coolants and biocides used at the plant should be obtained and evaluated for compatibility with mist collector components, gasket materials as well as the affects on human exposure, etc. Review flammability/combustibility of the coolants used. If its flash point is above 300F, the coolant may require a fire extinguishing system. The MSDS sheet will also provide information regarding any hazardous to humans by the use of the coolant.

When evaluating the different types of coolants used, verify the volatile organic compounds (VOC) status of the coolant, and whether a permit will be required for any discharge to the atmosphere. Verify whether the exhaust from the coolant is suitable for returning to the workspace. Some coolants can be very odoriferous, and will or could be objectionable to occupants if the air is returned to the workspace. Some coolants or additives may be carcinogenic, or toxic and may not be suitable for returning the filtered/treated process exhaust air to the workspace. In general, look for any indoor air quality problem that might arise from returning the air to the workspace, or verify if any special filtration or other type of air cleaning/treatment may be required.

There is a relative new additive being developed for the coolant, which is a mist suppressant. This additive forms long chains of oil molecules keeping the quantity of small oil particles to a minimum. The larger oil droplets fall quickly and do not float for long times in the air. These additives currently have a very short life and thus are quite costly to use.

Be careful of biocides put in coolants, which are used to control bacterial in the coolant.. When dealing with biocides, as any other contamination source, ensure that the exhaust can be returned to the workspace. Also verify what ventilation is required where the biocide is added to the coolant. When biocides are used, look at the MSDS to help define the ventilation requirements.

Foaming is caused by agitated high surface tension fluids which generate hard to break bubbles. Some surface tension reducing anti-foams are silicones. Confirm the type of anti-foam that may be used and check with the filter media manufacturer as to the impact on performance of the mist collector. This may be of greater concern for fiberbed filter type oil mist collectors compared to those that use HEPA filters. There are documented cases where a leaking pump seal, which introduces air into the coolant system, can cause considerable foaming of the coolant. When evaluating a foaming problem, remember to look at the coolant pumps, especially for leaks, which can entrain air into the system.

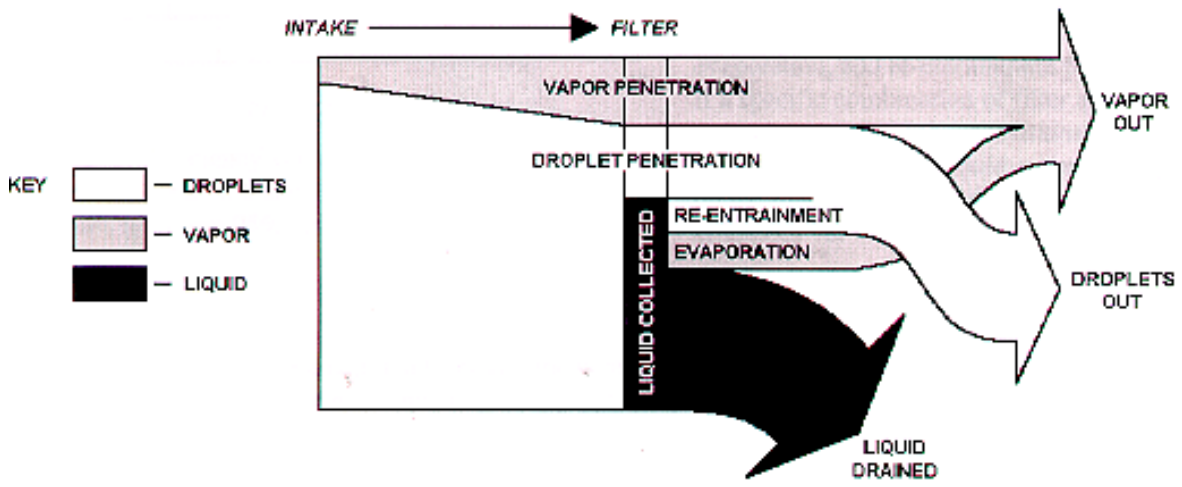

Figure 6.1. Schematic diagram of processes in air stream passing the filtration system Reproduced from [38].

a

b

Figure 6.2. Centralized oil mist control system with an airflow rate 40,000 m^3/h. Fourteen similar filters from Jacob Handte & Co. GmbH with a total capacity of 400,000 m^3/h are installed at Ford Werke in Koeln-Niehl, Germany. These systems extract from 600 to 1500 m^3/h of air contaminated with oil mist from more than 300 machines: **a** - partial view of the production hall with a ducting system to individual extraction points; **b** - oil mist separators installed on a platform.

a

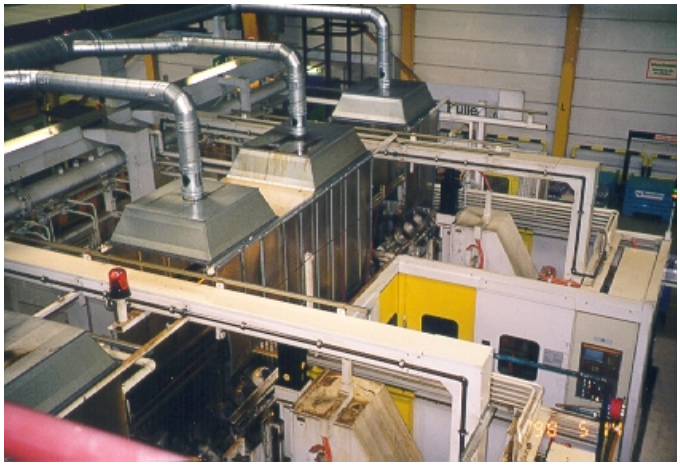

b

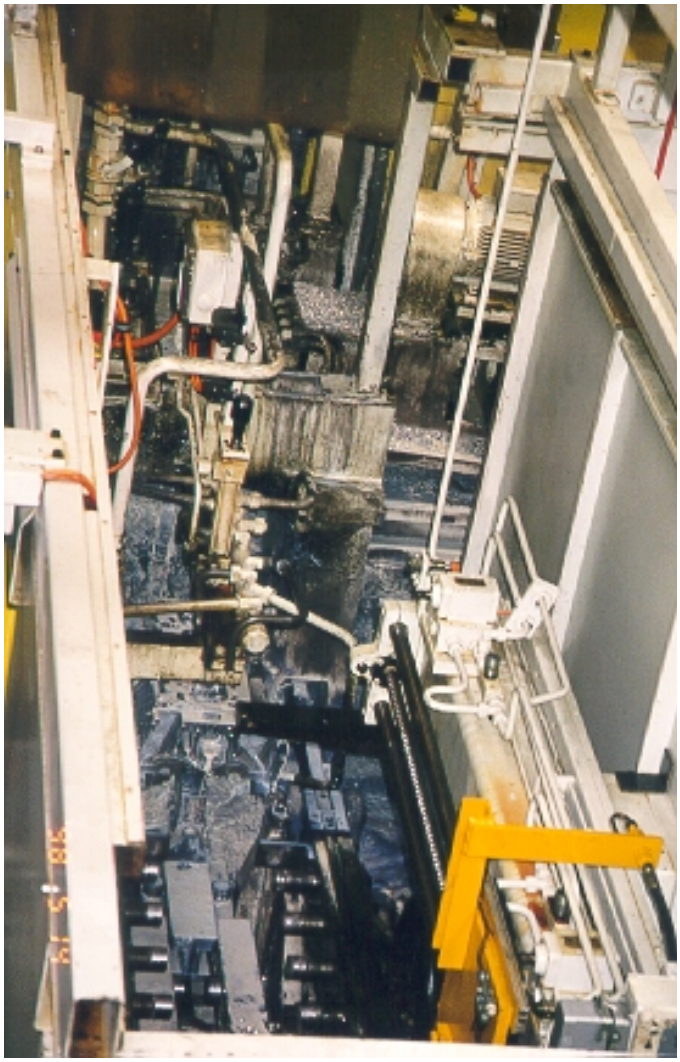

Figure 6.3. Machining shop at BMW Engine Plant in Stayer, Austria. Machines (**a**) and transfer lines (**b**) are not enclosed from the top and air contaminated by an oil mist is extracted from overhead hoods.

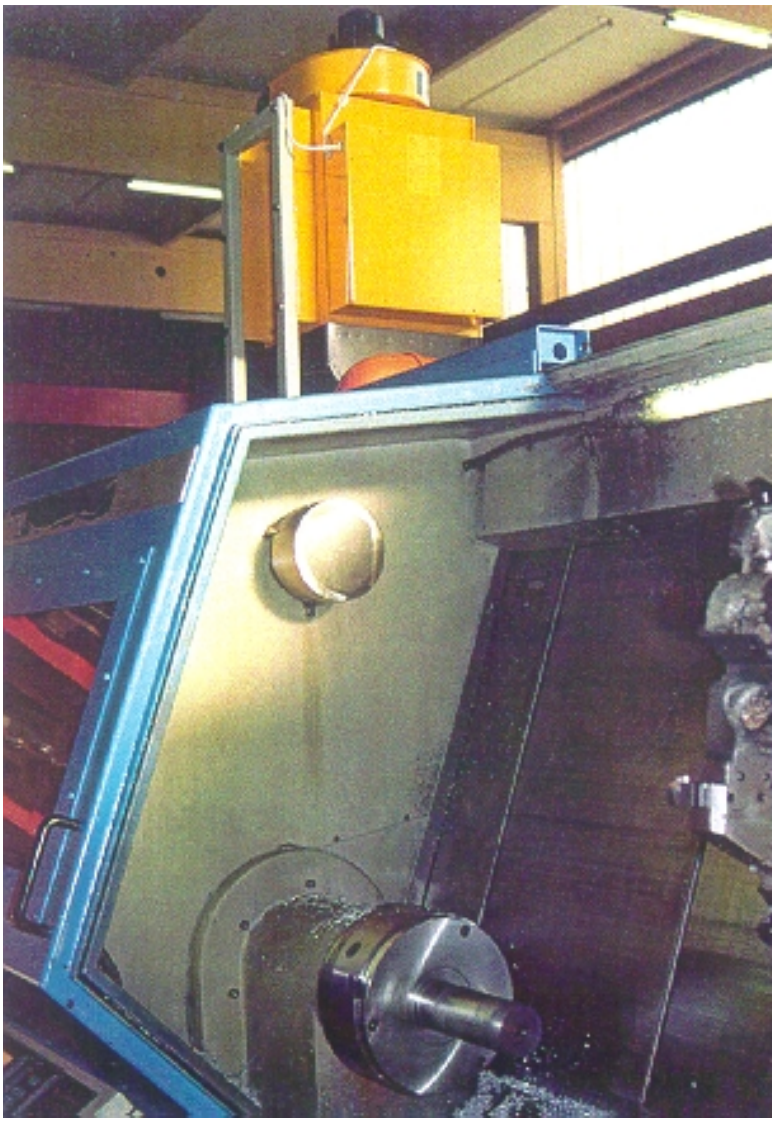

Figure 6.4. Oil mist control system with Plymovent AB electrostatic filter EFO-2000 mounted directly on the machine. Cleaned air is exhausted outside the building passing through heat exchanger to utilize the heat generated in the process.

Figure 6.5. Machining shop at BMW Engine Plant in Stayer, Austria. Machines are totally enclosed and equipped with a centralized oil-mist control system.

a

b

c

Figure 6.6. Machining shop at American Axel and Manufacturing Corporation Plant in Detroit, Michigan. Machine enclosures are connected to a centralized oil-mist control system with a total airflow rate of 13600 m^3/h: **a** - ducts connected to machine enclosures; **b** - multiple stage Monroe Environmental Corp. oil-mist collector with a baffle separator, washable mesh filter, fiberglass bag filter and a HEPA filter; **c** - air either exhausted outside the building, or returned back into the shop.

a

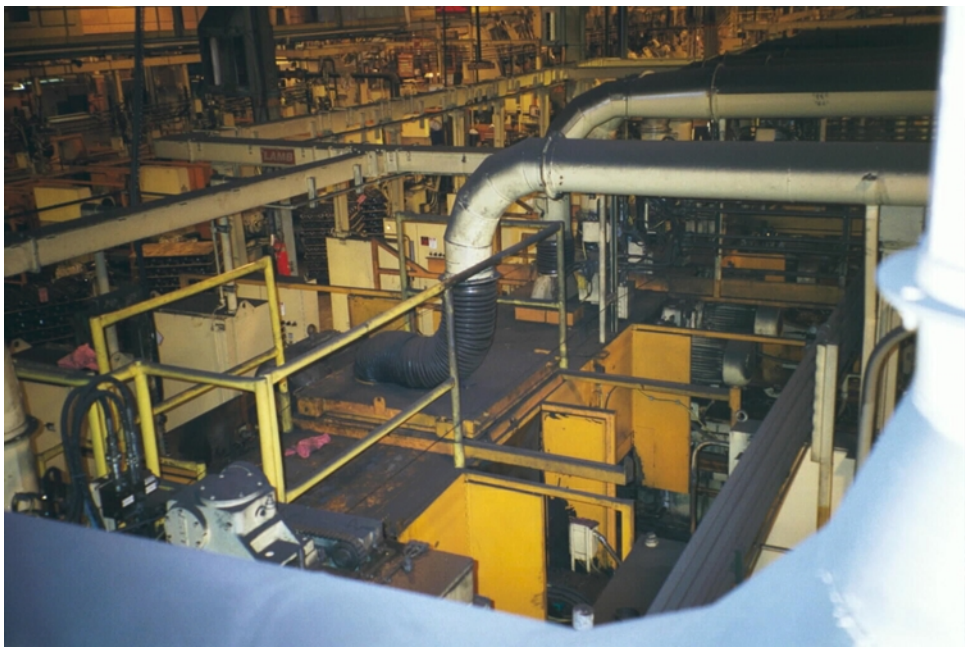

b

Figure 6.7. Close capture for cast iron head milling operation: **a** - with tunnel guarding and rollaway hood. Operator straddles cutter during tool change. Fine dust does not wear flex ductwork excessively; **b** - duct swivels at joint to swing hood away from cutters for tool change. Operator straddles cutter during tool change. Fine dust does not wear round elbows made of abrasion resistant plate. The same operation as in (**a**) with a different approach to guarding and dust collection.

Figure 6.8. Exhaust from aluminum block milling station enclosure. The design of machine enclosures and exhaust connections can be accomplished more efficiently during the initial phase of machine design. Casting materials change and tooling follows. This particular machine was designed for aluminum and cast iron. Aluminum machining sometimes requires coolants over the tool and the cast iron tooling may require a dry environment. This station was designed for a low velocity exhaust pick up for mist control during wet machining.

Figure 6.9. Exhaust from cast iron block milling enclosure. High velocity exhaust systems are much more compact than their medium to low velocity mist control counter parts. The point of exhaust must also be considered. These operations have connections for mist control above the tooling for wet machining. The dry machining exhaust to limit the migration of aerosols into the personnel area was taken from the back of the enclosure. This was done to move the collection point away from the hot gas and smoke cutter discharge and therefore prolong the dust collector filter life. The machine is tightly enclosed so that the exhaust location is still effective.

Figure 6.10. Roof-top air handling unit with energy recovery from centralized oil mist control system at the BMW Engine Plant in Stayer, Austria.

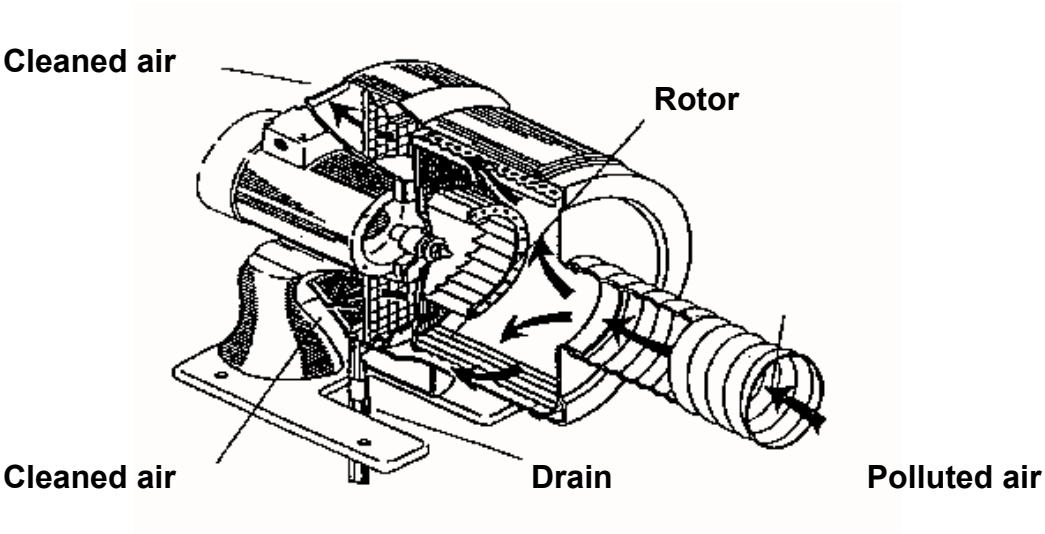

Figure 6.11. Centrifugal separator

a

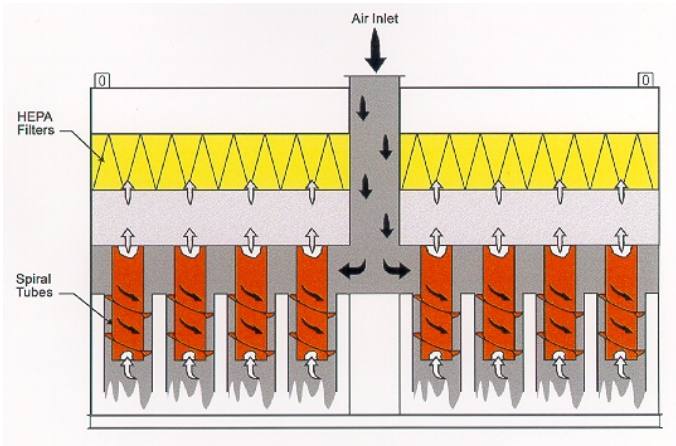

b

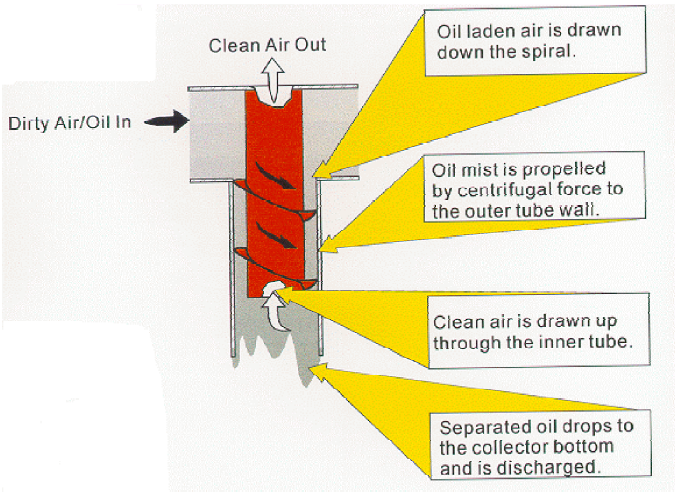

Figure 6.12. Spiral tube oil-mist separator: **a** - schematic; **b** - oil separation in a spiral tube. Reproduced with permission from Monroe Environmental Corp.

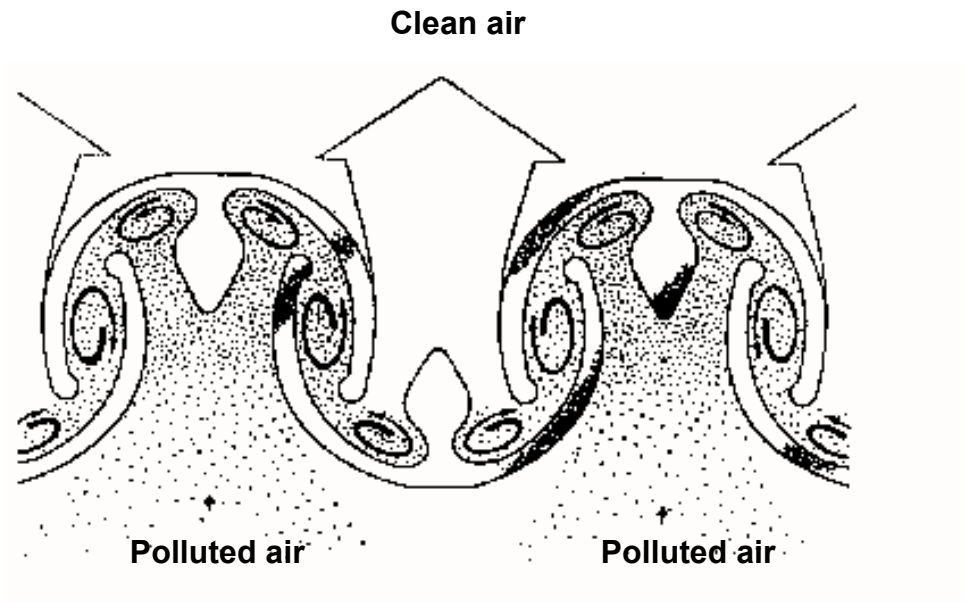

Figure 6.13. Buffle-type oil-mist separator (schematic)

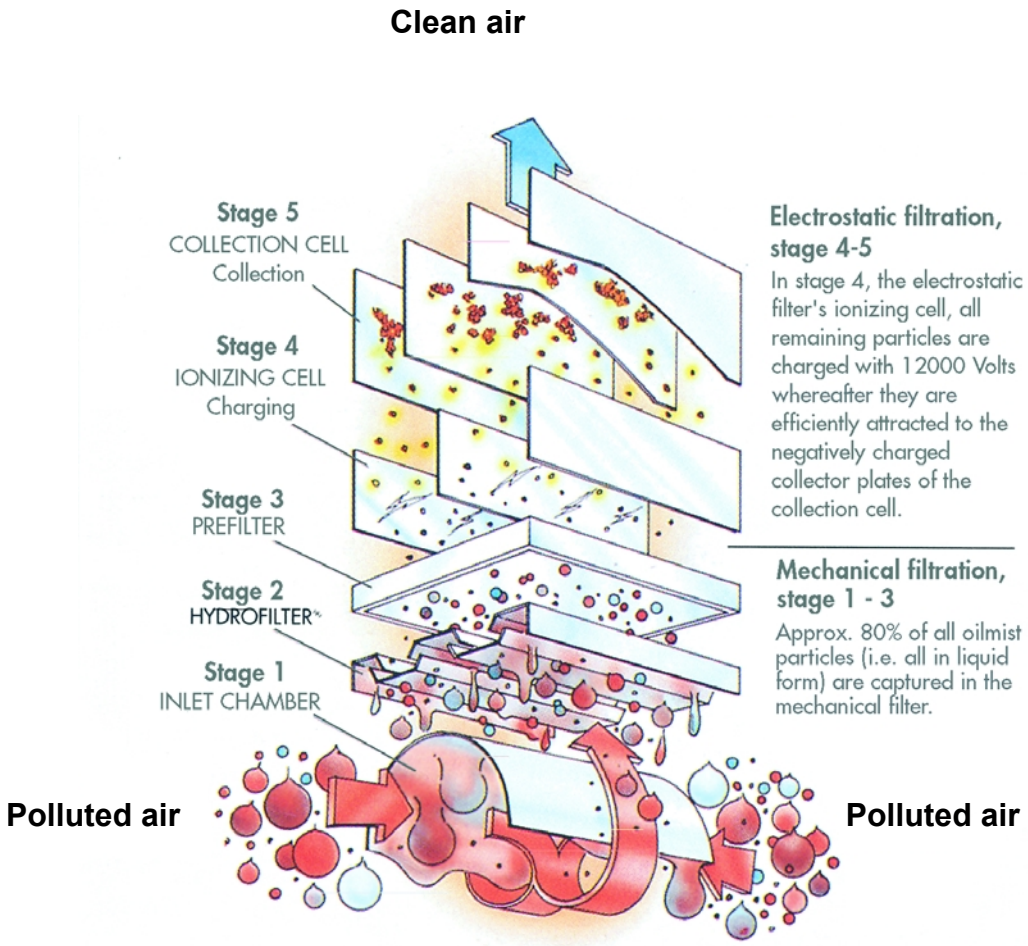

Figure 6.14. Schematic of electrostatic filter for MWF mist separation. Reproduced with permission from Plymovent AB.

a

b

c

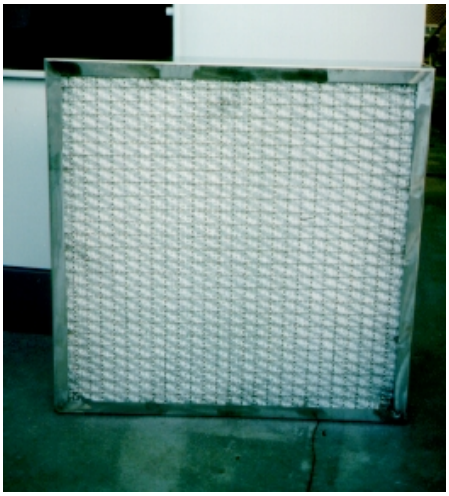

Figure 6.15. Oil mist collector from Jacob Handte & Co. GmbH installed at BMW Engine Plant in Stayer, Austria. Collector with an airflow capacity of 20,000 m^3/h has three filtration stages with mesh filters: **a** - general view of oil mist collector in the shop; **b** - aluminum mesh filter (100 mm deep), **c** - knitted wire mesh filter of metallic-synthetic material (100 mm deep).

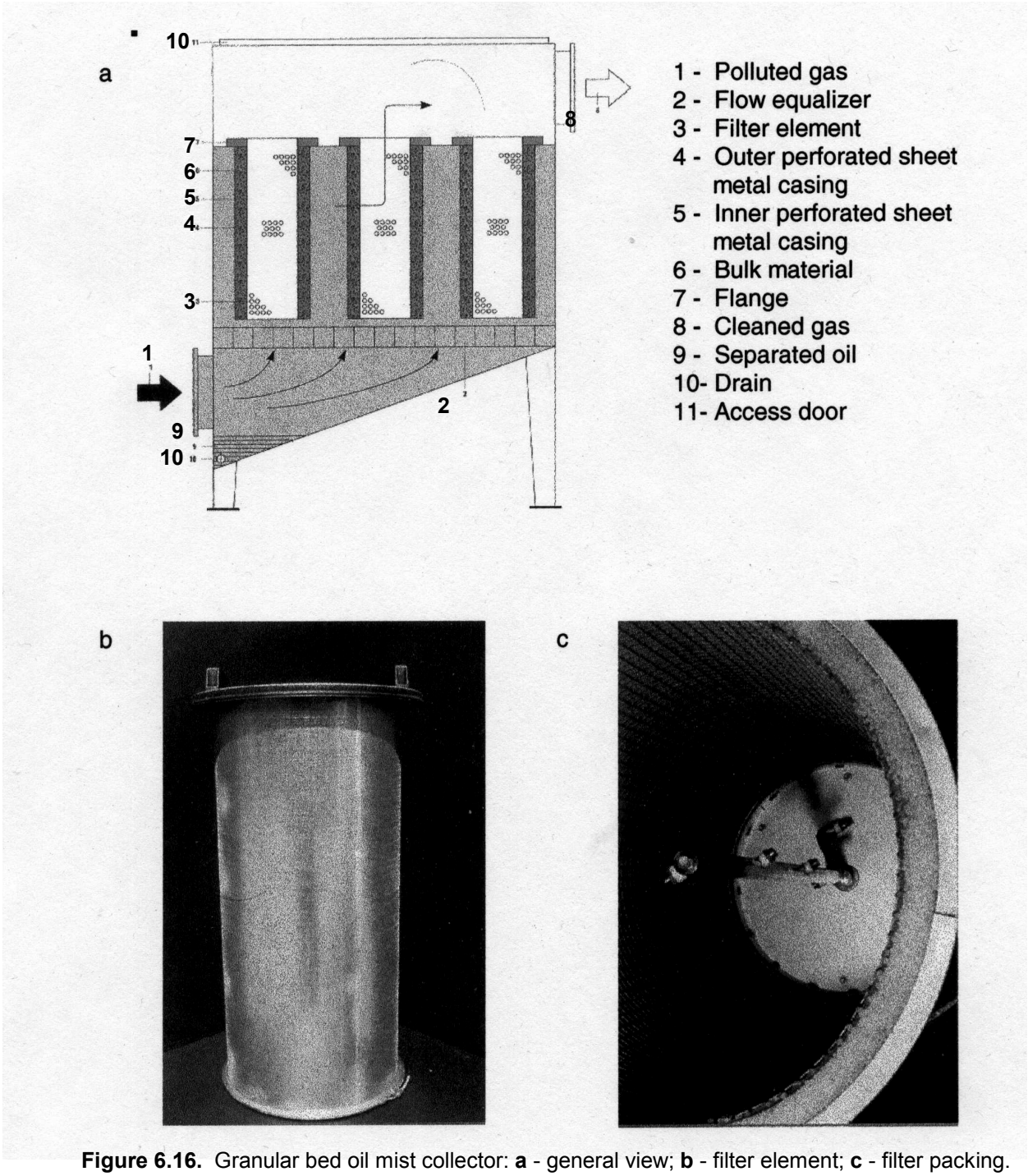

Figure 6.16. Granular bed oil mist collector: **a** - general view; **b** - filter element; **c** - filter packing. Reproduced with permission from Krantz-TKT.

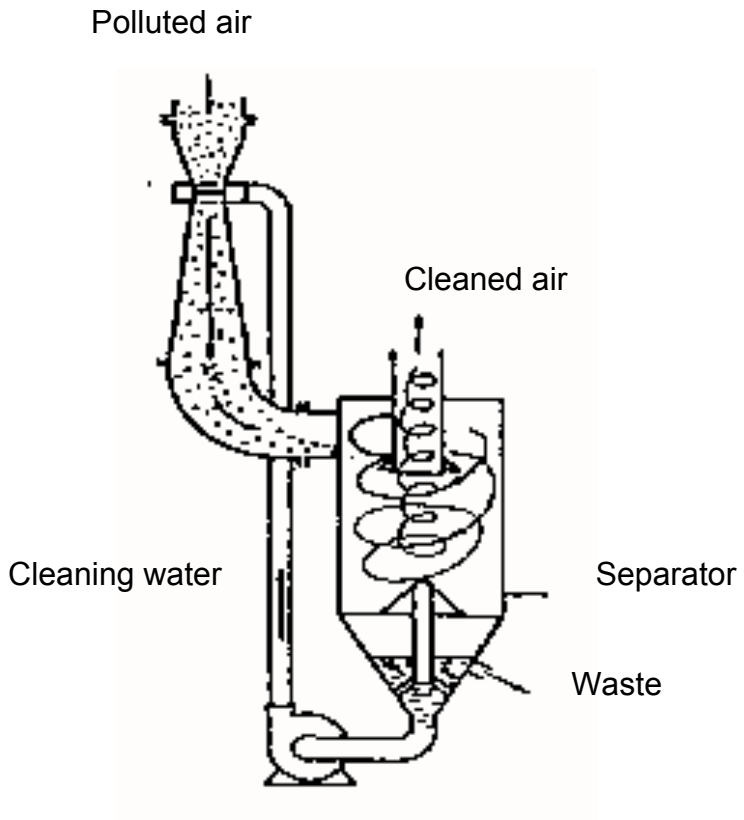

Figure 6.17. Venturi-type scrubber.

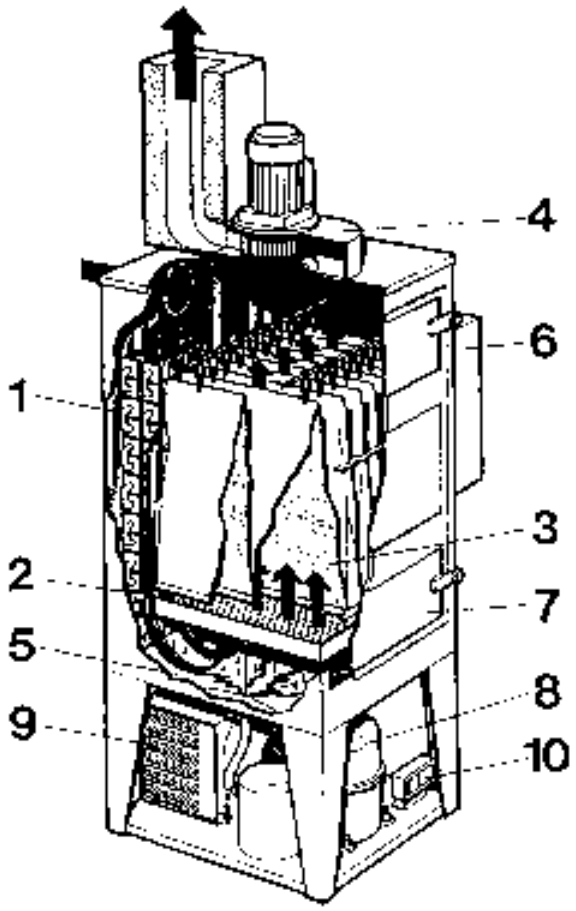

Figure 6.18. Schematic of an oil mist collector with an oil vapor condenser: **1** - cooling coil; **2** - condensate separator, **3** - fabric filter, **4** - fan, **5** - drain, **6** - electrical box, **7** - inspection door, **8** - compressor, **9** - condenser, **10** - control valve. Reproduced from [48].

a

b

Figure 6.19. Centralized dust collection system from cast iron block mill enclosures (**a**). The application of the dust collector and the location can have an impact on the installation. In one application the dust is fine without any chips. The duct connection to the dust collector may be nothing more than a transition to slow the particulate down and distribute the dust over the filter area. A different application may require an abrasion resistant inlet for a mixture of dust and chips. The bottom of the inlet provides an area to collect chips and allow the air born particulate to strike this bed prior to being drawn into the collector (**b**).

a

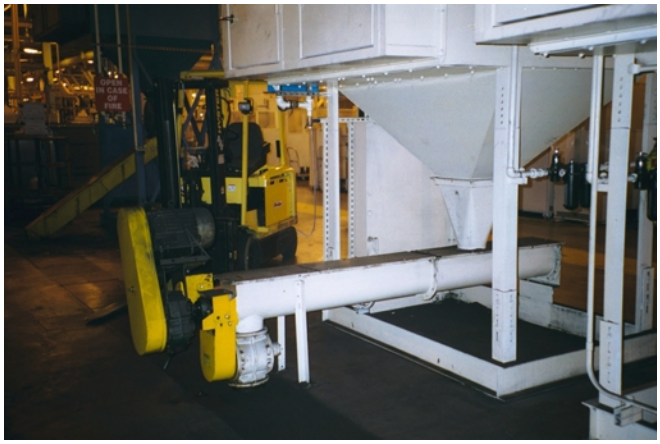

b

Figure 6.20. Dust collector for cast iron applications: a - dust and chips from the dust collector are discharged from the collector hopper through a screw conveyor and rotary air lock.. The rotary valve is used for a fine dust and mild chips; b - dust and chips from the dust collector are discharged from the collector hopper through a rotary air lock and shut. The shut is connected to the coolant trench to reduce maintenance. The shut is designed at a steep angle to allow chips to be conveyed to the flume below. When the flume (coolant trench) is further away, the shut is flushed with coolant. The rotary valve is used for a fine dust and mild chips. Sharp chips may cut into the rotary valve gasket and housing. The dust collectors are always fire sprinkled.

7. ASSEMBLY PLANT

7.1. Process description. The operation of an automotive assembly line consists of long straight line(s) or lines that weave back and forth through the assembly building. Pre-manufactured parts or sub-assemblies such as drive train, engines, seats, body parts, and other components are brought to the assembly line from adjacent storage areas via conveyors or manual delivery. A speed-controlled conveyor moves the automotive chassis from one station to another where parts are attached by assembly personnel or automatic. At the end of the assembly line, the completed automobile is filled with operating fluids, started for the first time and tested for proper engine/transmission operation and water seals performance. It is then driven off the assembly line where it receives necessary alignment and engine testing. If the vehicle passes inspection it will proceed outside to a storage lot for later shipment to dealer. If the vehicle fails inspection due to improper operation it will proceed to a mechanical or paint inspection and rework department for necessary repairs.

7.2. Process Emissions Overview. In most of the assembly plant the process generates only heat primarily from the conveyer, electrical motors and lights. There are heat losses/gains through the building envelope. Also, at the following workstations there are emissions of contaminants:

- **Windshield gluing station**. Emissions are generated from the adhesive compounds which are used to seal the windshield to the body frame. In many cases this process is still performed manually, exposing the worker to hazardous solvent vapor compounds which vary depending on manufacturer's blend.
- **Door seals and trim stations.** Emissions are generated from adhesive compounds that are used to attach door seals and interior trim components to the body frame. The affixing of these components subject the worker to solvent vapor compounds which are potentially hazardous but more likely to be annoying or discomforting to the workers or operators in the surrounding areas.
- **Fuel filling station.** Emissions are generated from gasoline and Diesel fuel vapors which are generated during the first fueling process of the vehicle. These vapors escape when the air is displaced by the liquid fuel as the fuel tank is filled. Emissions also occur in this area due to spillage which occurs through worker error.
- **Vehicle engine start-up station.** Emissions are generated from the first time combustion process of the newly started engine. It produces high concentrations of hydrocarbon as well as first time burn off of engine sealant. Quite often emissions at this point are greater then under normal operation since the engine has not been properly tuned. Since the engine has not been properly tuned, the emissions, resulting from the incomplete combustion, generate PAHs (polynuclear aromatic hydrocarbons) which have been identified as human carcinogens.
- **Chassis alignment inspection station**. Emissions are generated from the running of the vehicle when driving on to or off of the alignment pit. The alignment inspector is subjected to exhaust gases which are heavier than air and sink into the operator's pit which increases the concentration of exhaust gases in the workers breathing zone. These emissions are the same as experienced at time of engine start-up.

- **Vehicle engine test station**. Emissions are generated when the vehicle is placed on a rolling road (Dyno test) and is accelerated to 50 mph. Since the vehicle's drive train is being engaged and the engine is now required to generate horsepower, the vehicle engine components and exhaust system for the first time are being subjected to elevated exhaust gas temperatures. These elevated temperatures, along with the increased volume and velocity of exhaust gases, bake off and displace contaminants such as engine sealant, lubricants and coolants used to manufacture parts, and fiberglass packing fibers which are manufactured into the exhaust muffler.
- **Engine rework station.** Emissions are generated when the vehicle is required to run for the purposes of diagnosing an improperly running engine. In many cases an engine technician must diagnose, adjust and/or repair a vehicle's engine resulting in sustained or elevated exhaust gas emissions being emitted into the worked environment. He also is subjected to emissions being generated from under the hood of the engine compartment where sealant or paint vapor compounds or hydrocarbon emissions are being emitted into his breathing zone.
- **Paint rework station**. Emissions are generated when the vehicle requires paint rework due to small-localized paint imperfections which were found during the vehicle QC (Quality Control) inspection process. Workers in this area are exposed to paint particulate and solvent vapors which are associated with the painting process. Particulate control is also essential in this area for the purpose of eliminating dust infiltration into the painting process.
- **Certified fueling station**. Emissions are generated by the fueling process of the vehicle by EPA (Environmental Protection Agency) classified and certified fuel used for the process of determining EPA mileage and emission standards for the vehicle being manufactured. The emissions at this station are emitted during the fueling process where the air in the tank is being displaced by the fueling liquids and subsequently entering the workers breathing zone.

7.3. Sources of Auto Emissions. Pollutants are emitted from multiple sources from a vehicle (auto, truck) while in the assembly. These emissions are even more concentrated when the vehicle is first started. The following are the three greatest pollutant sources with the highest level of toxic exposure to plant personnel (see Figure 7.1) [12].

1. The by-products of the engine combustion process (gas or Diesel) expose workers to **PNAs, NOx**, **CO**, **SO_2**, **CO_2**, and approximately 100 other VOC, organic, acidic compounds.
2. Fueling losses expose workers to PNAs, benzene compounds, which have low vapor point and are lighter than air.
3. Evaporation of fuels, solvents and oils which react together to develop into complex chemical compounds.

Vehicle Exhaust Pollutants

Hydrocarbons (HC). Hydrocarbon emissions result when fuel molecules in the engine do not burn or burn only partially. Hydrocarbons react in the presence of nitrogen oxides and sunlight to form *ground-level ozone*, a major component of smog. Ozone irritates the eyes, damages the lungs, and aggravates respiratory problems. A number of exhaust hydrocarbons are also toxic with the potential to cause cancer.

Nitrogen oxides (NOx). Under the high pressure and temperature conditions in an engine, nitrogen and oxygen atoms in the air react to form various nitrogen oxides, collectively known as NOx.

Carbon monoxide (CO). Carbon monoxide is a product of incomplete combustion and occurs when carbon in the fuel is partially oxidized rather than fully oxidized to carbon dioxide (CO_2). Carbon monoxide reduces the flow of oxygen in the bloodstream and is particularly dangerous to persons with heart disease.

Carbon dioxide (CO_2). In recent years, the U.S. Environmental Protection Agency (EPA) has started to view carbon dioxide, a product of "perfect" combustion, as a pollution concern. Carbon dioxide does not directly impair human health, but it is a "greenhouse gas" that traps the earth's heat and contributes to the potential for global warming.

Diesel exhausts [9,18]. Workers exposed to Diesel exhaust face the risk of adverse health effects:

Short-Term (Acute) Effects. Workers exposed to high concentrations of Diesel exhaust have reported the following short-term health symptoms:

- irritation of the eyes, nose, and throat;
- lightheadedness;
- feeling "high"
- heartburn;
- headache;
- weakness, numbness, and tingling in extremities
- chest tightness;
- wheezing;
- vomiting.

Long-Term (Chronic) Effects. Although there have been relatively few studies on the long-term health effects of Diesel exhaust, the available studies indicate that Diesel exhaust can be harmful to your health. According to the National Institute for Occupational Safety and Health (NIOSH), the International Agency for Research on Cancer (IARC) [11,15, 17], the Environmental Protection Agency (EPA), Diesel exhaust should be treated as a human carcinogen (cancer-causing substance)[10].

Evaporative Emissions. Hydrocarbon pollutants also escape into the air through fuel evaporation. Evaporative emissions occur several ways:

> **Diurnal:** Gasoline evaporation from the fuel tank and venting gasoline vapors.
> **Running losses:** The hot engine and exhaust system can vaporize gasoline when the car is running.
> **Hot soak:** The engine remains hot for a period of time after the car is turned off, and gasoline evaporation continues when the car is parked.
> **Fueling:** Gasoline vapors are always present in fuel tanks. These vapors are forced out when the tank is filled with liquid fuel.

Idling Vehicle Emissions [8]**.** There are situations in which estimates of emissions from idling vehicles are needed. As with driving emissions, idle emissions are affected by a number of parameters. For analyses not requiring detailed specific emission estimates tailored to local conditions, this summary of idle emission factors can be used to obtain first-order approximations of emissions under idle conditions (e.g., drive-through lanes).

The following tables present idle emission factors, in grams per hour (g/hr) and grams per minute (g/min) of idle time, for volatile organic compounds (VOC), carbon monoxide (CO), and oxides of nitrogen (NOx). Idle emissions of particulate matter (PM10) are provided for heavy-duty Diesel vehicles only; PM10 emissions from gasoline-fueled vehicles are negligible, especially when the elimination of lead in gasoline and reductions of sulfur content are accounted for. Emission factors are provided for both summer and winter conditions for VOC, CO, and NOx. These idle emission factors are from the MOBILE5b highway vehicle emission factor model (VOC, CO, NOx) and the PART5 model (PM10 for heavy-duty Diesel vehicles only).

These emission factors are national averages for all vehicles in the in-use fleet as of January 1, 1998 (winter) or July 1, 1998 (summer). PM10 idle emission factors for heavy-duty Diesels are as of January 1, 1998.

Table 7.1. Idle emission factors for volatile organic compounds (VOC), carbon monoxide (CO), and oxides of nitrogen (NOx).

Pollutant	Units	LDGV	LDGT	HDGV	LDDV	LDDT	HDDV	MC
VOC	g/hr	16.1	24.1	35.8	3.53	4.63	12.5	19.4
	g/min	0.269	0.401	0.597	0.059	0.077	0.208	0.324
CO	g/hr	229	339	738	9.97	11.2	94.0	435
	g/min	3.82	5.65	12.3	0.166	0.187	1.57	7.26
N0x	g/hr	4.72	5.71	10.2	6.50	6.67	55.0	1.69
	g/min	0.079	0.095	0.170	0.108	0.111	0.917	0.028

Acronyms: CO: Carbon monoxide; GVW: Gross vehicle weight; NOx: Oxides of Nitrogen (mostly NO and NO2); PM10: Particulate matter, diameter 3/4 10 microns; psi: Pounds per square inch; RVP: Reid vapor pressure, a common method of expressing the volatility (tendency to evaporate) of gasoline; RVP is vapor pressure measured at 100°F (38°C). VOC: Volatile organic compounds (for vehicles, this refers to exhaust emissions from incomplete combustion of gasoline, which is composed of a blend of hydrocarbon compounds)

Table 7.2. Particulate Matter Emissions*

Engine Size	Emissions
Light/Medium HDDVs (8501-33,000 lbGVW)	2.62 g/hr (0.044 g/min)
Heavy HDDVs (33,001+ lb GVW)	2.57 g/hr (0.043 g/min)
HDD buses (all buses, urban inter-city travel)	2.52 g/hr (0.042 g/min)
Average of all heavy-duty Diesel engines	2.59 g/hr (0.043 g/min)

* The only vehicle category for which EPA has idle PM10 emission factors is heavy-duty Diesels. Particulate emissions are also observed to be relatively insensitive to temperature

Definitions of Vehicle Types used in Table 7.1. and Table 7.2:

MC: Motorcycles (only those certified for highway use; all gasoline-fueled)
LDGV: Light-duty gasoline-fueled vehicles, up to 6000 lb Gross Vehicle Weight (GVW) (gasoline fueled passenger cars);
LDGT: Light-duty gasoline-fueled trucks, up to 8500 lb GVW (includes pick-up trucks, minivans, passenger vans, sport-utility vehicles, etc.)
HDGV: Heavy-duty gasoline-fueled vehicles, 8501+ lb GVW (gas heavy-duty trucks)

LDDV: Light-duty Diesel vehicles, up to 6000 lb GVW (passenger cars with Diesel engines)
LDDT: Light-duty Diesel trucks, up to 8500 lb GVW (light trucks with Diesel engines)
HDDV: Heavy-duty Diesel vehicles, 8501+ lb GVW (Diesel heavy-duty trucks)

7.4. Target levels. There is no OSHA standard for Diesel exhaust. However, OSHA does have workplace exposure limits for individual components of Diesel exhaust, such as carbon monoxide, sulfur dioxide, benzene, carbon dioxide, nitrogen dioxide, acrolein, and formaldehyde.

In addition, OSHA has a standard for "nuisance" dust that is applicable to the soot in Diesel exhaust. The standard limits "respirable" dust exposures (particles that are small enough to lodge in the lung) to 5 milligrams per cubic meter of air (5 mg/m^3) averaged over eight hours.

Because Diesel exhaust has been shown to cause cancer, NIOSH recommends that Diesel exhaust exposures be reduced to the lowest feasible limits.

Table 7.3. Occupational exposure values [1,3,14]

		Benzene, mg/m^3	CO, mg/m^3	CO_2 ,mg/m^3	NO_x , mg/m^3	PM, mg/m^3
US A	OSHA, PEL	3	55	9000	-	5
	ACGIH, TLV	1.6	29	9000	5.6	3
	NIOSH, REL	0.32	40	9000	-	-
Sweden, LLV		1.5	40	9000	2	0.5
Germany, MAK		-	35	9000	9.5	1.5
Russia, PDK		100	20	-	2	4

7.5. Process related measures to reduce occupational exposure to vehicle exhausts and fuel vapors.

- Separation of areas followed the engine starting from the rest of assembly line by creating a positive pressure buffer zone;

- Utilization of gasoline filling nozzles with a built-in vapor recovery system [23] (Figure 7.2). With this system, as the gasoline enters the fuel tank, the displaced vapor is collected through a vacuum intake located concentrically with a nozzle near the filler neck of the tank as the nozzle spout is inserted. The captured vapors are transferred back to the storage tank. The capturing efficiency of these systems is greater than 95%, i.e., per each liter of dispensed gasoline. More than 0.9 liters of the vapors are captured. Diesel fuel is much heavier and does not create as much of a vapor emission problem as gasoline does.

- Utilization of onboard exhaust filters (Figure 7.3) for driving the vehicles in the assembly shop [7]. EHC filters are connected to exhaust pipes with a plastic adapter and will have a filter life of approximately 5 –10 minutes. Particles, smoke and soot with the size down to 0.1 μk are separated in the filter with up to 99% efficiency. Oxides of nitrogen (~ 60%) and hydrocarbons (~35%) are absorbed on the filter surface. The filter also reduces the concentration of carbon monoxide by 5-25%. The filter cartridge is disposable as normal industrial waste. Filters are available for different sizes of exhaust pipes on cars and trucks with gasoline and Diesel engines, primarily used for vehicle transportation with short running times such as plant exiting or ship board loading or unloading.

7.6. Ventilation.

Ventilation systems in the assembly shop typically consist of local exhaust ventilation systems to control vehicle exhaust and contaminant emissions from contaminant producing areas, (e.g., windshield gluing, car testing (Figure 7.4, Figure 7.5, Figure 7.6), and a general ventilation system. General ventilation is needed to dilute the contaminants released into the building that are not captured by local ventilation systems. General ventilation systems supply make-up air to replace air extracted by local exhaust systems. Also, supply air is used to heat and cool the building. Buildings should be pressurized to prevent air infiltration creating cold drafts in winter and hot humid air in summer.

7.6.1. Local exhaust systems.

7.6.1.1. Vehicle Exhaust Extraction Systems. Local exhaust system for vehicle exhaust control can be enclosing and non-enclosing. Enclosing type exhaust systems typically have a flexible hose with a tail-pipe adapter. Hose reel (Figure 7.7), overhead rail extraction system (Figure 7.8) or rail extraction system installed under conveyer (Figure 7.9), are examples of enclosing exhaust systems. Enclosing system for vehicle exhaust control is normally classified as a sealed or non-sealed system. Non-enclosing systems, e.g. underfloor exhaust system shown in Figure 7.10, pit ventilation system (Figure 7.11) and overhead hood (Figure 7.12) are typically used systems in a high volume production process.
Sealed type exhaust systems utilize a tailpipe adapter, which makes an airtight seal between the exhaust tailpipe and the flexible exhaust ventilation hose. The attachment of this

nozzle is usually through the use of an air filled bladder made of synthetic rubber which conforms to the size of the vehicle's tailpipe. This eliminates the escape of exhaust gases when the vehicle is being accelerated or run on high idle testing. In turn, this reduces the operating air volume.
(See Figure 7.7 and Figure 7.8 for examples of sealed exhaust systems.)
Non-sealed systems utilize a tailpipe adapter**,** which has a loose fit, which require a larger volume of air to maintain a negative pressure control over the exhaust gases being emitted by the vehicle. The attachment of this nozzle is usually by means of a mechanical device such as vice-grip clamp or spring clip. (See Figure 7.6)
Approximate airflow rates to be extracted per vehicle from the exhaust pipe utilizing a sealed fit tailpipe adapter or open-fit non-sealing tailpipe adapter are listed in Table 7.4. [19]
Down draft in-floor systems utilize an in ground floor ventilation duct which draws exhaust gases through a floor grate into a concrete lined combination floor drain and ventilation duct. An exhaust fan maintains a negative pressure of approximately 150-cfm per sq. ft. of open pit area which is evacuated by a central roof or penthouse mounted exhaust fan system. In-floor or pit exhaust systems require the highest volume of air and require periodic maintenance to remove foreign debris, fuel, and oil or coolant spillage. E.g., in-floor exhaust system shown in Figure 7.5 or a pit ventilation system shown in Figure 7.6.

Exhaust system evacuating exhaust gases though the in-floor opening with a flap is common for engine testing booths (Figure 7.13). Air exhausted from the engine-testing booth may contain fiberglass lints as a result of new mufflers burning. Thus, the exhaust system should be equipped with an air filter to prevent outdoor air pollution (Figure 7.14).

The capturing effectiveness of sealed exhaust systems is high and for design purposes can be considered 90% or higher. With non-sealed exhaust systems capturing effectiveness is below 75% [16].

Table 7.4. Airflow rates to be extracted per vehicle from the exhaust pipe utilizing a sealed fit tailpipe adapter or open-fit non-sealing tailpipe adapter.

Sealed Fit Tailpipe Adapter			
Veh. Type	**Engine Power (h.p.)**	**Airflow rate cfm (m^3/h)**	**Hose size**
MC/ATV	<100	200 (340)	3"
LDGV	<130	300 (510	3"
LDGT	< 175	450 (765))	4"
HDGV	< 250	500 (850)	4"
LDDV	< 325	500 (850)	4"
LDDT	< 400	500 (850)	4"
HDDV	< 500	750 (1275)	5"
ORV	< 600	1000 (1700)	6 "

Open Fit Non-Sealing Tailpipe Adapter			
MC/ATV	< 100	300 (510)	3"
LDGV	< 130	450 (765)	4"
LDGT	< 175	600 (900)	5"
HDGV	< 250	750 (1275)	5"
LDDV	< 325	750 (1275)	5"

LDDT	< 400	750 (1275)	5”
HDDV	< 500	1125 (1910)	6”
ORV	< 600	1500 (2500)	8”

Local exhaust system for vehicle exhaust control should be selected and engineered for each application. When designing, the following guidelines should be taken into consideration:

- consider the type of vehicles produced
- consider the production process flow logistics
- consider the maximum vehicle output rate.

In some situations a single exhaust system can be a good solution. In other cases a combination of different ventilation technologies may be required. E.g., at the Volvo Car assembly plant in G≈teborg, Sweden, flexible extraction system (Figure 7.6.) is a part of a comprehensive emission control strategy and is used only when cold engines are started. When engine warms up, flexible hose is replaced by an EHC filter, installed on the adapter to the tail pipe (Figure 7.3). The filter is used during car maneuvering in the shop. At the repair stations the filter is replaced by a hose reel exhaust (Figure 7.7), and in the engine testing both, where the in-floor exhaust with a flap (Figure 7.12) is used to control emissions from the vehicle.

Typical exhaust systems are shown in Table 7.5.

Table 7.5. Advantages and disadvantages of local exhaust systems used at assembly shop.

System Type	Advantages	Disadvantages	Application
In-floor system Figure (7.10).	Does not interfere with manufacturing process Does not require space above the floor	High construction costs High exhaust volume Low capturing efficiency	Assembly line
Air exhaust from the continuous conveyor pit (Figure 7.11).	Does not interfere with manufacturing process Does not require space above the floor	High construction costs High exhaust volume Low capturing efficiency	Assembly line
Continuous duct with a slot and flexible hoses connected to exhaust pipes (Figures 7.8 and 7.9).	Low exhaust volume High capturing efficiency	Require space to install ducts. May restrict manufacturing process May limit vehicle maneuverability	Assembly line and car maneuvering in the building
Hose reel (Figure 7.7).	Low exhaust volume Low initial cost High capturing efficiency	Limited maneuverability of vehicle connected to the hose	Test and repair stations
In-floor system with a flap (Figure 7.13)	Does not affect engine performance	High initial costs High exhaust volume	Engine test booth

7.6.1.2. Windshield Gluing Station Ventilation. The vapors produced by this manual process are captured by back draft or downdraft hood. Examples of the hoods used are presented in Figure 7.4a,b. For design criteria refer to ACGIH [2], ASHRAE [4], and DGB [6].

7.6.1.3. Door Seals and Trim Stations Ventilation. Local exhaust system use to capture the vapors produced by this manual process is similar to those used at the windshield gluing station: back draft or downdraft hood (see Figure 7.4.c). For design criteria refer to ACGIH [2], ASHRAE [4], and DGB [6].

7.6.1.4. Chassis Alignment Inspection Station Ventilation – The ventilation technique to properly ventilate the exhaust gases and evaporation of fluids off the vehicle is typically handled with a combination system. The pit where plant personnel are located is customarily ventilated through an in-floor method. Vehicle exhaust gases should be removed through the means of a source capture hose extraction system.

7.6.1.5. Engine Rework Station Ventilation – The ventilation technique to properly ventilate the exhaust gases produced while testing and operating the car in these service bays is typically through the use of retractable hose reels or retracting hose drops that are located overhead adjacent to each work position. Fume extraction for under hood vapors which the mechanic would be exposed to while working over the engine compartment is most commonly handled through the use of a source capture fume extraction arm with build in work lighting which ventilates vapors of evaporation out of the workers breathing zone. Also, sidedraft and overhead hoods are used to evacuate evaporative emissions from engine (Figure 7.5).

7.6.1.6. Paint Rework Station Ventilation – The ventilation technique to properly ventilate this area is through the use of a combination system consisting of horizontal flow push pull hoods along with a fume extractor arm with built in work lighting.

7.6.1.7. Certified Fueling Station Ventilation – The ventilation technique to properly ventilate this area is through the use of either fuel vapor recovery system for higher volume usage or a fume extraction arm and fan combination with an operating flow of approximately 700-cfm. Note: Fume extractor and fan must be provided as explosion resistant configuration.

7.6.2. General Supply Ventilation (see Chapters 9, 10, 11)

7.6.3. General Exhaust Systems. General exhaust systems complement local exhaust systems by removing contaminated air not captured by local exhausts. Such systems usually consist of inlets, ducts, and a fan. In some cases general exhaust can be provided by roof fans.

7.6.4. Exhausted Air Filtration and Recirculation

Source capture exhaust systems used for vehicle exhaust control, trimming and windshield gluing areas typically do not include air cleaning equipment, although air filtration technology does exist to allow for air cleaning before exhaust to atmosphere. It is not recommended

that exhaust air off of these processes be recirculated even if air filtration devices are incorporated in the system design. Air recirculation may be considered from the “clean” areas (without contaminant emission).

Note: It has been discovered that new mufflers subjected to first time high temperatures (Dyno testing) have experienced a condition where fibrous particulate along with tar-like hydrocarbons contaminated the exhaust gases and were in high enough concentrations to warrant air treatment before final exhaust to atmosphere. Thus, to prevent outdoor air pollution, engine testing booth exhaust system (Figure 7.13) should be provided with an air cleaner (Figure 7.14).

7.7. References

1. ACGIH. 1998. Guide to Occupational Exposure Values – 1998. American Conference of Governmental Industrial Hygienists. Cincinnati, OH.
2. ACGIH. 1998. Industrial Ventilation. A Manual of Recommended Practice. 23rd edition. American Conference of Governmental Industrial Hygienists. Cincinnati, OH.
3. AFS 1996:2. 1996. Occupational Exposure Limit Values. The Swedish National Board of Occupational Safety and Health.
4. ASHRAE. 1999. ASHRAE Handbook. HVAC Applications. American Society of Heating, Refrigerating and Air-Conditioning Engineers. Atlanta, GA.
5. BCH. 1990. Construction Requirements to Car Servicing Stations. BCH 01-89. Russian Ministry of Automobile Transportation. Moscow.
6. DGB. 2000. Industrial Ventilation Design Guidebook. Fundamentals. Academic Press.
7. EHC. 1998. Techniques and filtering of petrol- and Diesel -exhaust gases. EHC Teknic AB.
8. EPA. 1998. United States Environmental Protection Agency. Air and Radiation Office of Mobile Sources. EPA 420-F-98-014. April 1998.
9. EPA. 1996. United States Environmental Protection Agency. EPA 420-F95-009b. June 1996. OMS Fact Sheet.
10. EPA. 1994. U.S. Environmental Protection Agency (March and September 1994). Health Assessment Document for Diesel Emission (external review draft), Vols. I-III, EPA/600/8-90/057.
11. EPA. 1994. California Environmental Protection Agency, Office of Environmental Health Hazard Assessment (June 1994). Health Risk Assessment for Diesel Exhaust (preliminary review draft).
12. EPA. 1994. United States Environmental Protection Agency. EPA 400-F-92-007. August 1994. Fact Sheet OMS-5.
13. Ford. 1990. Heating, Ventilation and Air Conditioning. Ford Motor Company Plant Engineering Office. July 1, 1990. M15-M25.
14. GOST. 1988. General Requirements to the Occupied Zone Air. GOST 12.1.005-88. Moscow.
15. IARC (1989). International Agency for Research on Cancer. Monographs on the Evaluation of Carcinogenic Risks to Humans, Diesel and Gasoline Engine Exhausts and Some Nitrogens, Vol. 46.
16. Mercedes-Benz U.S. International, Inc. 1999. Private communications with Mr. Richard Burnis. Tuscaloosa, AL.
17. NIOSH. 1990. NIOSH Risk Assessment "An Explanatory Assessment of the Risk of Lung Cancer Associated with Exposure to Diesel Exhaust Based on a Study of Rats." (Publication No. NTIS PB-91-116-269.)

18. OSHA. 1998. Diesel Exhaust. Safety and Health. Fact Sheet.
19. Plymovent. 1998. Clean Fresh Air. Consultants Handbook. Vehicle Exhaust Products. Sweden: Plymovent AB.
20. Scania Partner AB. 1997. Private communications with Mr. Karl Pontenius.
21. VDI. 1997. Air Conditioning Systems for Factories. VDI 3802. VDI – Richtlinien. Dhsseldorf: VDI.
22. Volvo. 1998. Celero Support AB. Private communications with Mr. Sten-Arne H@kansson.
23. Wayne. 1994. The Wayne Vac Assist Type Vapor Recovery System. Wayne Division, Dresser Industries Inc. Technical Information: D10470394.
24. Woody, A. 1997. Ventilation Systems Applied to Automotive Manufacturing. Proceedings of the 5th International Symposium on Ventilation for Contaminant Control "Ventilation'97". September 1997. Ottawa.

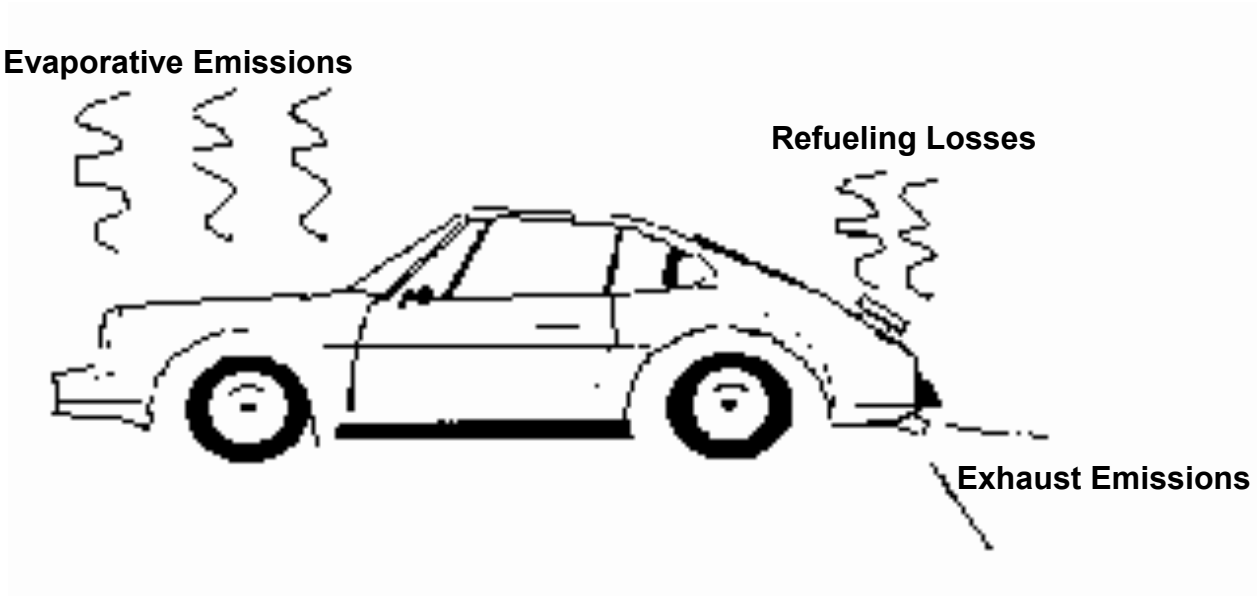

Figure 7.1. Sources of Auto Emissions. Reproduced from EPA [12].

a

b

c

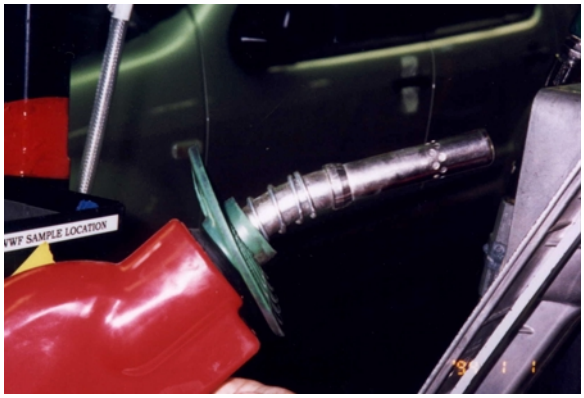

Figure 7.2. Gasoline vapor recovery system built-in gasoline filling nozzle:
a - fueling system from Dresser-Wayne Corp. installed at the fueling station at Volvo Cars assembly plant in Göteborg, Sweden; **b** - vapor recovery system and the nozzle with a built-in vapor exhaust (**c**), installed at Mercedes-Benz plant in Tuscaloosa, Alabama

a

b

Figure 7.3. EHC Exhaust Filter installed on the tail pipe of the car at Volvo Cars assembly plant in Göteborg, Sweden (a) and on the exhaust pipe of the truck (b).

a

b

c

Figure 7.4. Local exhausts at gluing areas: **a** - push-pull hood at the windshield gluing area; **b** - overhead hood at the windshield gluing area; **c** - sidedraft hood at the small parts gluing area; **a** - Volvo Cars assembly plant in Göteborg, Sweden; **b** and **c** - Mercedes-Benz plant in Tuscaloosa, Alabama.

Figure 7.5. Testing station at Chrysler Windsor Assembly plant, Ontario. Side-draft and overhead hoods are designed to evacuate evaporative emissions from the engine.

a

b

Figure 7.6. Flexible non-sealed extraction system for vehicle emission control at Volvo Cars assembly plant in Göteborg, Sweden: **a** - general view; **b** - flexible hose connection to the tailpipe adapter, which has a loose fit.

Figure 7.7. Each repair station in assembly shop at Scania Truck Plant in Södertälje, Sweden, is equipped with a hose reel extraction system to control emissions from a diesel engine.

a

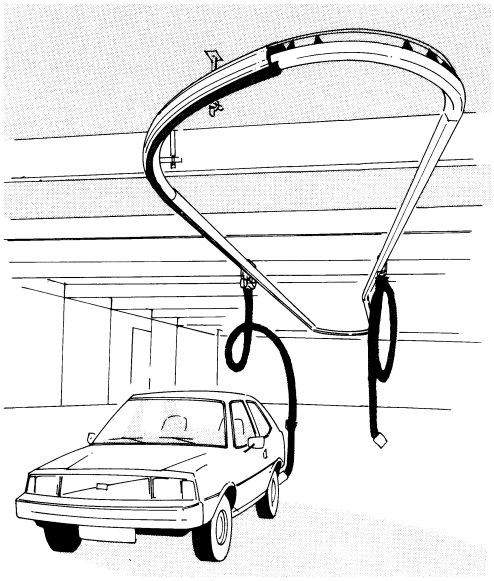

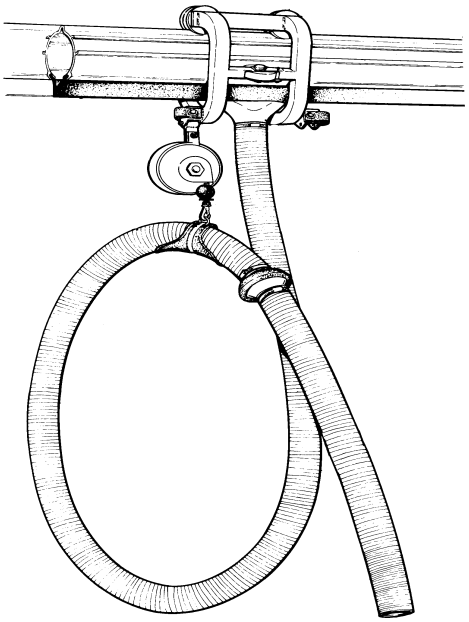

b

c

Figure 7.8. Looped rail extraction system for capturing vehicle exhausts: **a** - schematic; **b** - at Mercedes-Benz A - class plant in Brasil; **c** - at Scania Truck Plant in Södertälje, Sweden.

a

b

c

d

Figure 7.9. Sealed type exhaust system with ducts installed under conveyer platforms at the DaimlerChrysler assembly plant in Sindelfingen, Germany. Two tailpipe adaptors are connected to flexible exhaust hoses attached to a collecting box installed on the platform (a). Collecting box is connected to the linear nozzle (b) moving with a platform within the slot in the duct (rail) with a rubber seal (c). The rail is installed underneath conveyer platforms and is connected to the duct of the extraction system.

a

b

c

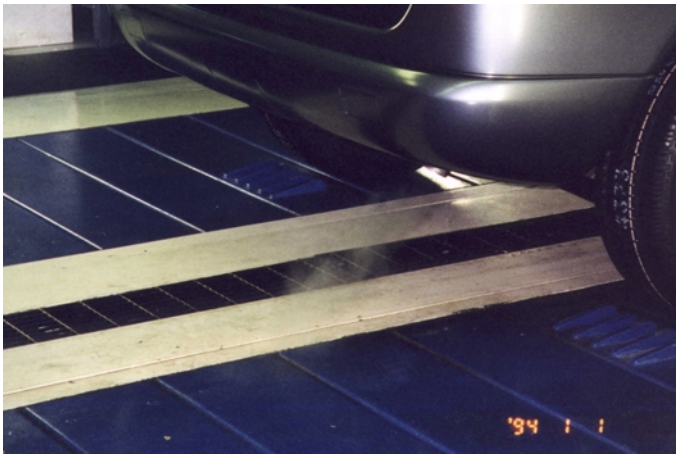

Figure 7.10. Underfloor exhaust system: **a** - general view; **b** - rectangular opening in the floor with a grating cover; **c** - linear opening in the floor with a grating cover; **a** and **b** -at the Ford Werke assembly plant in Koeln-Neihl, Germany; **c** - at the Mercedes-Benz plant in Tuscaloosa, Alabama.

Figure 7.11. Pit ventilation system. Ford plant in Sâo Bernardo do Campo, Brazil.

Figure 7.12. Canopy hood over the tractor vertical exhaust pipe at the assembly line of John Deere Davenport Works, Iowa.

a

b

Figure 7.13. Underfloor exhaust system at the engine testing booth at Volvo Cars assembly plant in Göteborg, Sweden: a - general view of the testing booth; b - exhaust opening with a flap.

Figure 7.14. Engine testing booth with an air filter to clean exhausted air at the Mercedes-Benz plant in Tuscaloosa, Alabama.

8. PAINT SHOPS AND AREAS

8.1. Process description. The purpose of paint on an automotive vehicle is to provide:

- Corrosion protection
- Mechanical protection, like scratch and stone chip
- Protection against atmospheric and natural influences, like chemical activity and mar;
- Optical appearance, color and general attractiveness

A typical automotive paint process is illustrated in Figure 8.1. It shows typical corrosion protection measures, paint film layers and their necessary paint cure temperatures. It is important to understand that the paint process may vary widely with both the paint vendor's process and user's requirements.

An automotive paint shop consists of a series of operation steps. Starting from the body shop, the car bodies are transferred to the cleaning and phosphating pretreatment process, which is performed either in spray or in a combination of spray and immersion process. After pretreatment phase, the bodies are dip coated by means of the cathaphoretic paint deposition process (also called Electrocoat, E-Coat, or ELPO), the purpose of which is to provide the basic corrosion resistance of the bodies, The E-Coat paint is cured in the dedicated bake oven after which the bodies are transferred to any necessary sanding operations, underbody protection coating and sealing operations, followed by a sealer oven, in which the sealing materials are cured. The first spray paint process is primer surfacer, which provides a mechanical anti chip protection of the E-coat paint and makes the surface at the body more uniform for subsequent top coat application. The primer surfacer paint is applied an outside and partly on inside surfaces depending of the color system as a single color, 3-4, or more colors. The primer surfacer paint is cured; the bodies are transferred to sanding operations and top coat preparation consisting of body cleaning outside (feather duster machines) and partly inside (mostly manual). The bodies enter the base coat booth, where base coat paint is applied, in most cases in two layers, inside (manual or robotic), outside (mostly automatic), followed by a paint flashoff process and a final clear coat application. The topcoat paint application process is finalized by curing, paint quality inspection stations, spat repair stations and transfer to the assembly shop in the plant. Powder painting technologies are currently being utilized by several manufacturers.

8.1.1. Basic Technologies in Automotive Paint Finishing

The most important technologies applied in automotive paint shops are:

- Body conveyor systems, transportation, material handling, storage systems and logistics
- Body immersion systems for cleaning, degreasing, phosphating and corresponding process equipment, including waste water and sludge treatment
- E-Coat body Immersion process technology, paint ultrafiltration, conditioning, circulation, cathaphoretic deposition, anode system and grounding technology and DC rectifiers;
- Paint handling and atomization including paint mixing and preparation, paint circulation, supply, dosing and metering, color change, flashing and rinsing, paint atomizers with spray guns, high speed rotation bells and high voltage systems for electrostatic coating, as wall as paint controls;
- Paint automation including reciprocator machines, robots and their central systems;
- Paint spray booths with air supply houses, air conditioning, distribution and controls;
- Spray booth exhaust systems including paint overspray collectors, droplet demister systems, paint sludge treatment;
- Paint cure oven technology including oven tunnels, air circulation heater boxes and

temperature central;

- Exhaust air pollution control including, abatement of VOC (volatile organic compounds) air recirculation, solvent adsorption/ desorption systems and VOC incineration;
- Building, general plant facilities, ventilation and controls

The above list shows that a considerable part of the automotive paint shop technology is based on air handling techniques. That is the reason why the process part of the paint shop business is traditionally carried out by the paint system supplier, like ABB Fläkt, Air Industry Systems, Dürr, Eisenmann, Haden, TKS, etc. At the same time this emphasizes the importance of air handling and ventilation technology in the paint shop facilities industry.

8.2. Qualitative analysis of major loads and emissions from paint process.

All paint (with the exception of powder coatings) contains VOCs due to the solvent, which is the major component of the paint formula. Tuluene and xylene are two of the many chemical compounds used as paint solvents. Isocyanates are a by-product of the resin (binder) used in the paint formula. Some of these compounds are present during the paint application process. These compounds are also given off during the curing process as auto bodies travel through the oven. The types and quantities of specific compounds depend upon the process. Obtaining such information requires coordination between the building engineers, process engineers and paint manufacturers. Properly designed and operated paint booth should ensure contaminant emission into the building is below the allowable limits.

This section covers a qualitative consideration of expected loads of air contaminated with organic solvents or particulate emissions, as well as expected heat loads from the paint shop process to the building. It will be divided into several sub sections, which handle individual parts of the paint process. For more information refer to [7]

8.2.1. Pretreatment Line. Car body pretreatment line is generally built in the form of a tunnel with relatively tight sheet metal housing, which covers a series of process spray or immersion tanks. It has openings at the entrance side and at the exit of the tunnel, where some leakage of air loaded with degreasing liquid spray fumes can be expected. It should not be higher than 4,000 - 5,000 m^3/h per an air seal zone and the liquid droplet concentration should not exceed 2000 mg/m^3, if the process and equipment is built and tuned properly. At the exit end of the pretreatment line a load of another 2,000-3,000 m^3/h humid air loaded with some relatively clean water droplets (from last spray rinse stage after phosphate) can be expected. Depending of the conveyor used, there can be also other openings, where some contaminated air loads can be expected. The phosphate line itself is internally ventilated. Some leakage of air between the panels of the housing is possible in both directions (to and/or from the inside), depending on the adjustment of ventilation pressures, but this leakage should not be higher than 50-100 m^3/h per 1 m length of the tunnel, Of course, this may vary with the quality of the manufacturing and installation of the tunnel and ventilation adjustments.

Major parts of the pretreatment line (degreasing, phosphating and rinsing stations) operate at elevated temperatures. That is the reason why (in spite of insulation of tunnels and process tanks) that some additional heat loads can be expected in the building. Their more exact evaluation is more complex and is outside of the scope of this study.

8.2.2. E-Coat Line. E-Coat line is in its technology rather similar to the pretreatment line. It uses the same type of the conveyor and similar type of body immersion and spray treatment stages. However, the process and the equipment are very different, including Paint circulation, UF system, DC power supply, anode system and body grounding system. The E-Coat line is built as a series of 2 or 3 immersion tanks (E-Coat tank, UF permeate rinsing and DI water rinsing stages) and several spray rinsing stations. The line is covered by the tunnel housing and ventilated. The E-Coat line operates neatly at room temperature. The E-Coat paint circulation system is equipped with a cooling system in order to keep the paint at a constant temperature (normally between 27 and 32°C).

8.2.3. Paint Spray Booth Lines. The main part of the spray booth is the booth itself through which the bodies are transported mostly by a floor conveyor system and coated by automatically or manually operated paint spray guns or high speed rotation electrostatic bell cup atomizers. The spray booth height is normally 3.5 - 4.5 m and its width ranges between 4.5 and 6 m. The booth consists of several paint application zones. Each zone is between 4 and 20 m long and the total spray booth length for one type of coating (primer surfacer, base coat and clear coat) can be between 20 and 100 m, depending on capacity. The booth is ventilated by conditioned air. The temperature of the air is generally controlled to 20 -25°C (±1°C) and relative humidity of 50-70 % (±5% or even down to ±2-3% for water borne paint, the application of which is more sensitive to humidity), the air downdraft velocities are between 0.2 and 0.5 m/s depending on type of the spray booth zone, automation and application principles. The air supply system consists of air supply houses (air conditioning units), mostly placed in a penthouse or upper floors of the paint shop building, air distribution plenum and ductwork. The exhaust air from the spray booth is treated by a Venturi wet scrubber or any other paint overspray collector in order to collect paint overspray particles. The scrubber water is recirculated in the system and accumulated paint particles are collected in the form of paint sludge. A reuse in automated booths of the spray booth exhaust air (several hundred thousands m^3/h) is possible in the process and needs to be evaluated by OSHA or the governing body. The paint sludge treatment system is based on processes of detackification, coagulation, as well as flotation or sedimentation. The task of the system is to separate the paint sludge from recirculation water in order to be able to use the water as long as possible and to dispose the accumulated paint sludge. The paint sludge system is normally located in the lower floors of the paint shop building. It has some environmental impact through potentially bad smell, leakage of recirculation water and sludge. The ventilation requirements are not exactly defined and may vary from one plant to the other.

Spray booths normally operate within a clean room that is maintained in a positive pressure mode in order to prevent any dust or dirt of entering the paint booth area. The spray booths operate very close to ambient temperatures, so that there should be no heat loss or gain in the building surrounding the booth.

The penthouse areas of the paint shop building are normally warmer and noisier than the rest of the building, due to the air heating system, air circulation fans and motors etc., but there are no standard specifications for the calculation of building heat loads due to the equipment installed.

8.2.3. Paint Cure Ovens. Paint curing oven process requires heating up of the bodies normally within 10 minutes to a temperature between 130 and 180°C and holding them at that temperature for

20 minutes with a subsequent coating to approximately room temperature. There are many variations of oven processes, temperature curves and designs. In addition there are different types of air seals, in order to prevent heat losses and condensation of volatile compounds (straight through, camelback, A-type).

Ovens normally operate in negative-pressure mode. Infiltration of 1,000 - 2.000 m^3/h per air seal from the paint shop building. This air amount and the air needed to dilute the evaporated solvents and water in the oven recirculation system are brought in by adding heated fresh air to the oven. The fresh air can be preheated centrally for the oven tunnel, or locally for each oven zone. The sum amount of the entrained and preheated fresh air is exhausted to the stack at a temperature of approximately 120 - 160°C. This amount is normally between 5,000 and 20,000 m^3/h, depending of the type of the oven, and its capacity and the sum of all oven exhausts from the paint shop can be well over 100,000 m3/h. This waste energy can be used in principle, and it is used often in practice. However, there are some difficulties due to the condensation tendency of residual solvents (after incineration) and water vapor and corrosion risks due to a the presence of condensate at elevated temperature. The reuse of energy needs to be evaluated on a case by case basis.

Other heat loads from the oven are heat transmission losses from the oven tunnel to the surrounding and heat release from the body conveyor in entry and exit parts of the oven and eventually in the conveyor return line.

Body cooling tunnel releases some energy load to the building as well. It has similar air seal losses or gains as the oven itself. The exhaust air amount is large - roughly 50,000 - 100,000 m3/h or more per cooling tunnel. The exhaust air temperature is only slightly elevated to 30 to 40°C. This air is difficult to reuse for ventilation directly, due to contaminants. Its indirect use by heat recovery exchangers is economically questionable, due to its relatively low temperature.

8.2.4. Other Automotive Paint Processes. There are other areas in the paint shop, which generally belong to the spray booth technology, like sealing booths, panel and spat repair zones, sanding areas. They are continuous or stop-and-go work zones, where some specific operations are performed. The ventilation rates vary with paint shop automation level and paint material in use.

8.3. Coordination of the HVAC and Process Engineers.

The first step in coordination with the process vendor is to understand where their HVAC responsibility stops and where the building responsibility starts. The process vendor typically provides all of the make-up air and exhaust air to and from paint booths and ovens. They may also supply total HVAC of the clean room areas and spot cooling of workers on inspection, repair and prep decks. Areas that the building HVAC encompass typically include phosphate, pre-coat HVAC; oven area ventilation; inspection, sealer and repair deck general HVAC; and booth non clean room area HVAC. General building exhaust from toilet rooms and battery charge areas are also typically part of the building team responsibilities. Once the definition of scope between process and building is clear the transfer of information on all of the processes needs to start taking place. Because, in most cases this is a simultaneous engineering task the first information received will generally be a “best guess” with more firm information being provided as the design evolves. Information that is crucial for the vendors to provide, to design the building HVAC system, includes:

1. Heat rejection from equipment- this includes ovens, motors, booths, tanks, car bodies, etc.
2. Make-up air or excess air volumes from booths and ovens.
3. Spot cooling supply and return or exhaust volumes and temperatures.
4. Any miscellaneous exhaust or supply air requirements.

8.4. Heat emission to the building

Process equipment is the major contributor to the paint shop heat gains. Information on heat emission from the process is critical to calculate cooling loads for the different areas of the paint shop. Also, cooling load calculations for each area need to include exterior roof and wall gains or losses, interior wall losses or gains, interior lighting and people gains. A complete building heat balance should be done to verify all loads are properly accounted for. For a typical paint shop with an output of 40 jobs per hour internal loads may approach the following levels [5]:

Area	**Total heat load**
Phosphate pre-coat area.	880,000W (3,000,000 Btu/h)
Oven area.	1,470,000 W (5,000,000 Btu/h)
Oven strip-out area.	440,000 W (1,500,000 Btu/h)
Paint area.	1,173,000 W (4,000,000 Btu/h)

Note that these numbers are estimates only, and each paint shop has a different set of vendors and processes.

8.5. Target level.

8.5.1. Air temperature, relative humidity, air cleanliness. Air temperature, relative humidity, cleanliness within a paint shop are factors which are important for proper paint application and to create comfortable working conditions. The clean room spaces and booths' design requirements are process driven, as a function of paint vendor requirements. It is important to establish both indoor and outdoor temperature and humidity design conditions for the non-clean room spaces. The non-clean room spaces are comfort rather than process driven. The building outdoor design conditions may be different for process and building. A temperature or humidity that exceeds the design conditions may raise the temperature only several degrees in the building, but this rise could compromise the paint finish, thus requiring more conservative outdoor design requirements for the clean room and booth areas. Typical design temperatures and humidity for the building side of the paint shop are:

Indoors:

Area	**Temperature, °C (°F)**	**Relative Humidity**
Phosphate pre-coat area.	80-90	N.C.
Paint area clean room.	80	60%
Oven strip-out area	80-90	N.C.
Oven area	95-105	N.C.
Misc. work decks	80	N.C.
Paint Mix/Storage	72	50%
Penthouse	Ambient + 10	N.C.

Outdoors: ASHRAE 0.4% cooling design conditions.

Filtration should include 30% pre-filters on all systems with 90% final filters at booths and 65% final filters on work decks.

8.5.2. Building pressure management. The pressure relationships between the different areas of the building and adjacent body shops and assembly plants are critical to maintain the clean environment required within the paint shop. All areas of the paint shop want to be at a positive pressure with relationship to the outdoors and to the body shop and assembly plant. Also within the paint shop itself there is a hierarchy of pressure relationships with the most critical areas being the most positive. The relationships to the outdoors are as follows:

Area	**Pressure Relationship**
Body shop.	Neutral
Phosphate pre-coat area.	+
Oven area.	++
Strip-out oven area.	+++
Paint shop area.	+++
Paint shop clean room area.	++++
Paint Booth	+++
Assembly plant.	Neutral

Setting up an air balance block diagram between the different areas of the building (Figure 8.2.) and including all process and building supply and exhaust quantities, as well as transfer air between areas, aids greatly in evaluating the overall building air balance. Pressure relationships between areas can be maintained through several strategies. Providing constant volume systems that are properly balanced is the most straightforward approach. Providing variable volume or staged fan systems that modulate or cycle fans to maintain building differential pressures is a more sophisticated, but more costly and cumbersome method. Differential pressure relationships and sensors are affected greatly by prevailing winds and opening doors. When considering the building air balance and relative pressure relationships it is important to be aware of the large volumes of air that transfer through the many conveyor openings from one area to another.

8.6. Ventilation. Ventilation systems in paint shops typically consist of general supply and exhaust systems. The major objectives of the paint shop building ventilation system are:

- Provide required make-up air for process
- Maintain proper building pressurization
- Maintain comfort for occupants in the building
- Provide adequate ventilation air for the occupants

Typical ventilation rates for paint shop areas are:

Area	m^3/m^2h	(cfm/ft^2)	ACH
Phosphate pre-coat area.	47	2.5	2.0
Oven area.	47	2.5	4.0
Strip-out area.	28	1.5	3.0
Paint shop area.	28	1.5	2.5

Note: these numbers are generalizations, and may vary greatly depending on the room supply air temperature, discharge air temperature, heat load and total room volume.

The strategy of reusing air by transferring from more critical temperature and higher pressure spaces to less critical temperature and lower pressure spaces reduces the total air required and increases the ventilation rate through high temperature spaces like the oven areas. Transfer fans between areas, helps to maintain pressurization and distribute transferred air. Building exhaust fans are located in the oven area, strip-out area and phosphate area as required to maintain the building air balance.

Before any ventilation scheme is finalized a thorough review of local building codes should be undertaken and possibly a meeting with the architect, owner and the local building code official. Key issues include smoke purging, fire dampers and the transfer of large amounts of air from one area to another.

8.6.1. Coordination between process and building ventilation. Make-up air and exhaust air to and from paint booths and ovens are provided by process ventilation systems. HVAC systems design of the “clean room” areas and spot cooling of workers on inspection, repair and preparation decks is also responsibility of process engineers. Areas, for which HVAC systems are designed by building ventilation engineers, are: phosphate, pre-coat HVAC; oven area ventilation; inspection, sealer and repair deck general HVAC.

8.6.2. General supply systems. General ventilation supplies 100% outdoor air. The supply air flow rate should exceed the make-up air flow for booths and ovens and be sufficient for building pressure management. General ventilation supply units are located on the building roof or in a penthouse. For more detail on General supply systems refer to [1,2,3,4,5] and see Chapters 9, 10, 11.

8.6.3. General exhaust systems typically include roof mounted exhaust fans located in the oven area, laydown area and phosphate area as required to maintain the building air balance.

8.6.4. Air distribution. HVAC designers should try to supply air into the lower zone (at the floor level where possible) with air diffusers installed evenly along the shop. However, in nearly all paint shops some dumping of air is unavoidable, due to process restrictions. For more information on air distribution practices in paint shops refer to [2,3,6] and see Chapter 10.

8.7. References

1. ASA. 1964. American Standard Safety Code for the Design, Construction, and Ventilation of Spray Finishing Operations. September 18, 1964. ASA, Inc.: New York.
2. INRS. 1991. Guide for ventilating practice. No.9. – Ventilation of paint booths and paint areas. (Ventilation des cabines et postes de painture.) ED 663. INRS: Paris. (in French)
3. INRS. 1987. Guide for ventilating practice. No.10. – Paint of large and/or bulky equipment. ED 713. INRS: Paris. (in French)
4. Montmoreau, Bertrand. 2000. HEPA Filtration in paint booth and oven booth. Paint shop building heating ventilating and air conditioning. Proceedings of the 4th International Conference "Ventilation for Automotive Industry". Aachen, Germany. June 19-21. Zhivov& Associates, L.L.C.
5. Richards, John. 2000. Paint shop building heating ventilating and air conditioning. Proceedings of the 4th International Conference "Ventilation for Automotive Industry". Aachen, Germany. June 19-21. Zhivov& Associates, L.L.C.
6. Sodec, Franc. Air distribution systems for paint shops. Paint shop building heating ventilating and air conditioning. Proceedings of the 4th International Conference "Ventilation for Automotive Industry". Aachen, Germany. June 19-21. Zhivov& Associates, L.L.C.
7. VDI. 1996. VDI 3455. Emission Reduction: Volume production – car body painting plants. April 1996. VDI: Dhsseldorf.

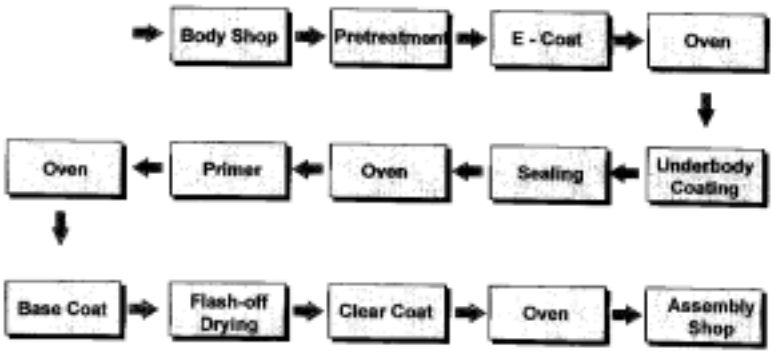

Figure 8.1. Typical Automotive Paint Process

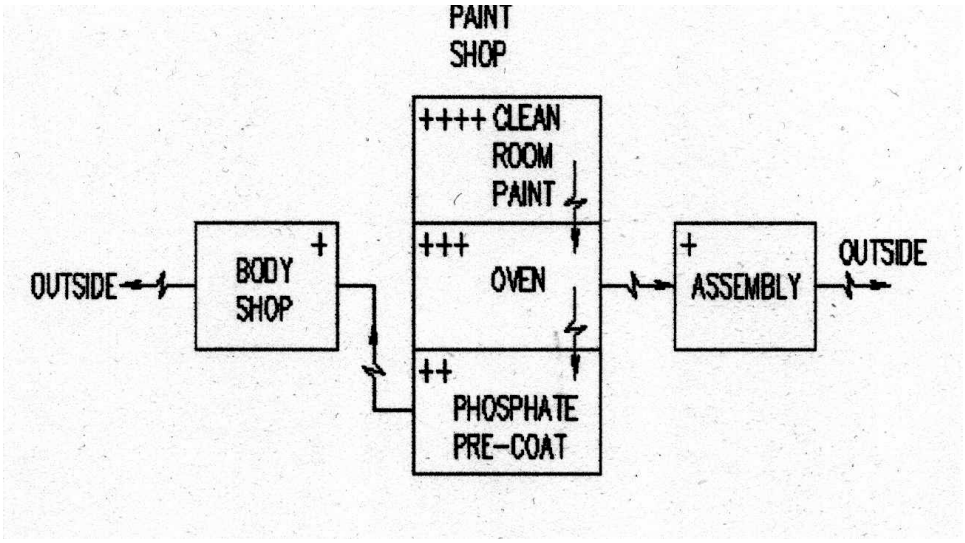

Figure 8.2. Paint shop air pressure management

9. GENERAL VENTILATION SYSTEMS

9.1. Types of General Ventilation Systems. General ventilation systems (supply and exhaust) can be mechanical or mixed (natural supply, mechanical exhaust). Natural air supply through the windows, doors or fixed air vents is not recommended when the width of the building exceeds 24 m (79 ft). Also uncontrolled air supply may disturb the process (e.g., gas shielding by creating high air velocities in the welding zone).

9.2. General Supply Systems. General supply systems are used for:

- heating or cooling working environment;
- removing contaminants not captured by local ventilation systems;
- replacement of air exhausted by local ventilation systems and process equipment; and
- controlling building pressure and airflow from space to space.

These systems typically consist of:

- outside air inlet;
- return air inlet;
- supply air handling unit,
- air distribution ductwork, and
- supply air outlets.

9.3. General Exhaust Systems. General exhaust systems complement local exhaust systems by removing air contaminated by fumes, gases or particles not captured by local exhausts.

Such systems usually consist of outlets, ducts, an air cleaner and a fan. The efficiency of the air cleaner must be sufficient to meet the regulations of environmental agencies and may be affected by location, background concentration in the atmosphere, nature of contaminants, height and velocity of the air discharge stack. In some cases the air cleaners may be excluded from the general exhaust system and general exhaust can be provided by the roof fans.

9.4. Centralized and decentralized (modular) systems. Centralized ventilation systems supply air to entire shop and have a large air distribution ductwork (Figure 9.1). Centralized system has lower maintenance costs compared to decentralized system. With decentralized ventilation (Figure 9.2), the entire shop area is divided into zones, ventilated by a separate system with or without air distribution ductwork. Decentralized units are normally located in the upper level below the roof (in the truss space) or on the roof. Decentralized systems provide better temperature and air pollution control in shops with spaces having different cooling/heating and contaminant loads. Also, decentralized systems allow faster response to the change of the load by production process in different zones. Normally centralized system does not have a capability for zonal control. In comparison to central units, decentral units incur less costs when retrofitting existing shops.

9.5. Constant air volume (CAV) and variable air volume (VAV) systems (Figure 9.6)**.** The airflow rate supplied into the shop throughout the year may be constant (Constant Air Volume systems) or variable (Variable Air Volume systems). The design of the air supply system is normally based on the full load (cooling, contaminant or make-up airflow needs). When only a partial load exists (e.g., in body and welding shops, assembly shops), thermal or pollution control may be achieved either by changing supply air temperature and/or the ratio of the outdoor and return air (CAV systems) or by changing the supply airflow rate (VAV systems).

The required supply airflow rate may vary significantly between winter and summer conditions or between different shifts (e.g., by 65% in body shops and machining shops with tempered air systems, and by 80% with non-tempered air systems. [5]

Often, ventilation systems for automotive plants are designed when the machinery equipment data may not be available. Ventilation system designs may be required to account for some future building expansions and changes in processes or space requirements. In such situations ventilation system can be sized considering the maximum possible load with an airflow control based on the current load.

VAV systems save heating, cooling and fan energy in comparison with CAV systems [2], but may require more maintenance costs and expertise to operate them. In some cases they can incur less costs when retrofitting existing shops. VAV systems allowing significant reduction of supply airflow rate require special attention to:

- selection of airflow control strategy (inlet vanes, fan motor speed control, etc.)
- ductwork design;
- air space air distribution; and
- building pressure management (coordination of supply and exhaust systems operation).

9.6. Air handling unit. The supply air handling unit components and configuration depend on the system usage (make-up air system, dilution ventilation system, heating and cooling, etc.), climatic conditions, and operating modes (CAV or VAV systems).

Typically, air-handling units have components to temper, clean, mix (outside air and return air), and to move the air. In situations discussed in Chapter 11 air handling unit may have equipment to recovery energy from the air exhausted outside to lower the enthalpy (temperature) of the air supplied into the building during the warm weather and to raise it during the cold weather. A microprocessor controls the air handling unit devices through sensors and actuators.

9.7. Working environment heating and cooling.

9.7.1. Heating systems. In machining, painting and body shops there is a significant surplus heat generated by internal heat sources. Thus, in most climatic conditions, cooling of the space is objective for most of the year. In large shops, heat typically needs to be applied to only the perimeter spaces. The internal area of the shop can maintain comfortable temperatures using the heat given off by the process. In machining, painting and body shops located in cold climates and assembly shops housing the processes with lower heat production, occupied zone air temperature in heating season is typically controlled with warm air heating combined with ventilation system. Supply air is heated in the air handling unit with heated water flowing through the heating coil or in direct fired gas heating sections. When piped natural gas is available the fired-gas approach is preferable, since it offers almost 100% heating efficiency by burning the gas in the supply air stream (Figure 9.3a). Sufficient amount of outside air must be supplied to prevent the build-up of carbon dioxide in the building. An alternative heating approach is indirect, gas-fired heating (Figure 9.3b), but it has a higher first cost and the heating efficiency is less than with direct gas-fired.

Temperature control can be also achieved with separate air heating systems, e.g.,

- recirculating or mixed air units located on walls and columns (Figure 9.4)
- hot water or indirect gas-fired overhead radiant heating systems (Figure 9.5).

9.7.2. Cooling systems. In cooling season air temperature in the building is controlled either by bringing additional outside air or by using refrigeration equipment to cool the air. Cooling systems in automotive plants are not designed to provide high level of comfort or control humidity, but only to control the temperature at the level below 80°F (27°C). The choice between the system with an extra outside air and refrigeration systems shall be made based on:

- Feasibility of the system to maintain the required thermal conditions during the peak outside air temperatures;
- Economical analysis. The extra outside air approach requires oversized fan and air distribution system. The temperature of supply air is typically 5 to 10°F (3 to 6°C) higher than the outside air temperature due to (1) warmer temperature near the air intake compared to the ambient air (solar radiation to the roof), (2) air temperature increase in the duct system located in the upper zone of the building and (3) fan energy.

Operating costs for the system with refrigeration equipment should consider, that cooling capability being used only when needed.

9.8. References

1. ASHRAE. 1997. ASHRAE Handbook. Fundamentals. American Society of Heating, Refrigerating and Air Conditioning Engineers, Inc. Atlanta, GA.
2. ASHRAE. 1999. ASHRAE Handbook. HVAC Applications. American Society of Heating, Refrigerating and Air Conditioning Engineers, Inc. Atlanta, GA.
3. Pack, M. 1998. Principles of Automotive Plants Design Worldwide. Proceedings of workshop “Ventilation Guide for Automotive Industry”. 7-9 September 1998. Bokenas, Sweden.
4. VDI 2262. 1994. Workplace Air. Reduction of Exposure to Air Pollutants. Ventilation Technical Measures. Part 3. VDI-Handbuch Reinhaultung. Dhsseldorf.
5. Woody, A. 1998. Ventilation Systems Applied to Automotive Manufacturing. Proceedings of workshop “Ventilation Guide for Automotive Industry”. 7-9 September 1998. Bokenas, Sweden.

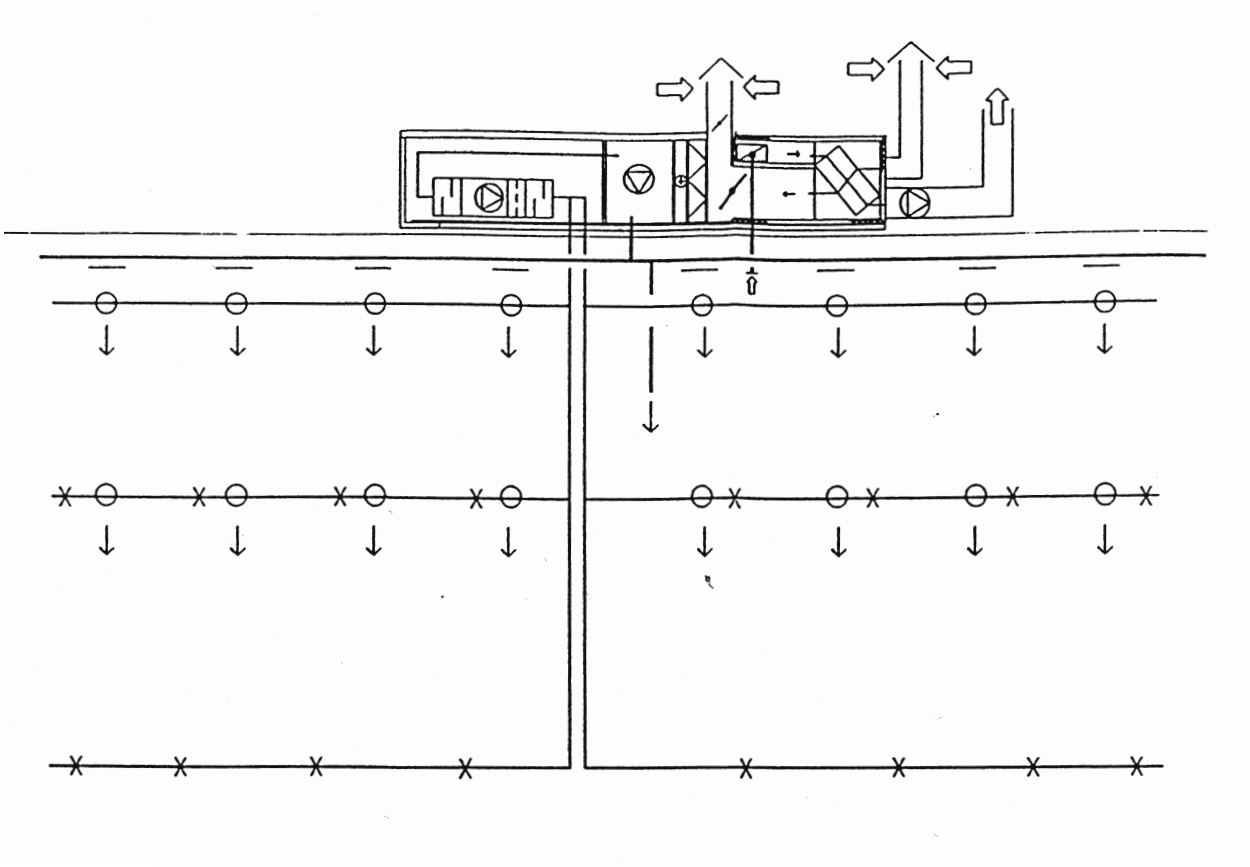

Figure 9.1. Schematics of centralized general ventilation system. Reproduced with permission from Celero AB.

a

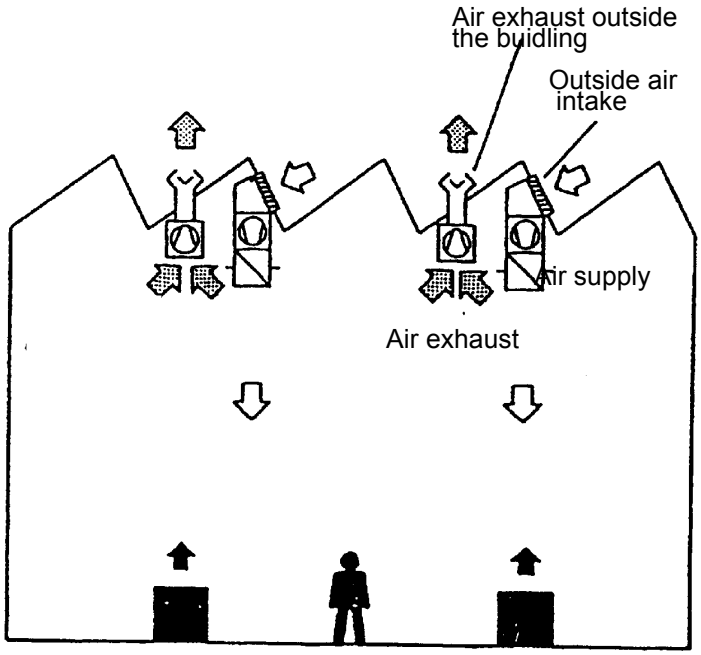

b

Figure 9.2. Decentralized general ventilation system: **a** - schematic [4] , **b** - air-handling units on the roof top at the John Deere Harvest Works plant in East Moline, Illinois.

a

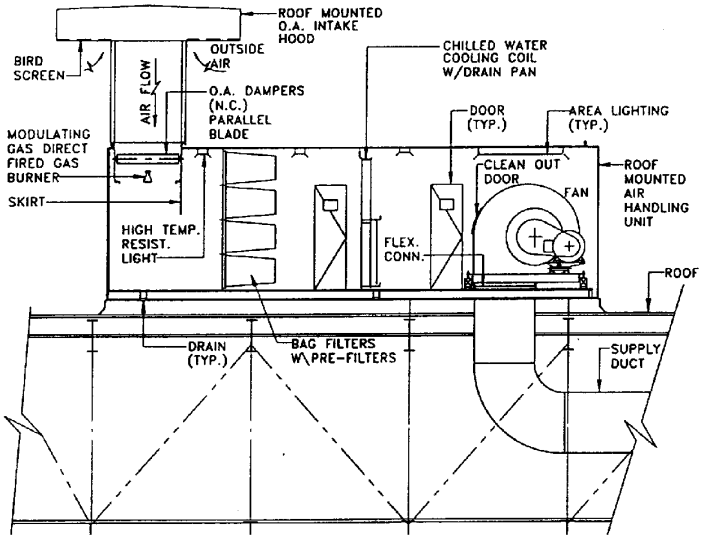

b

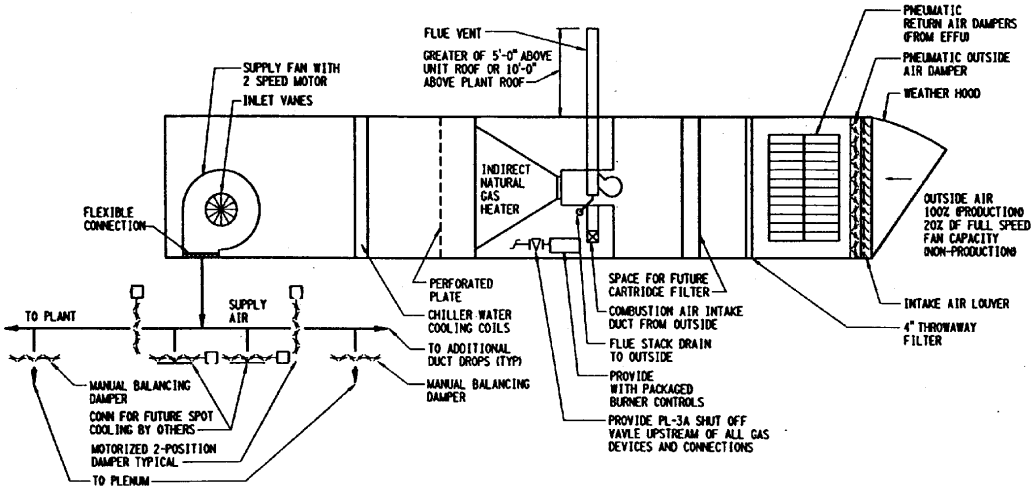

Figure 9.3. Roof mounted air handling unit: **a** - with a chilled water cooling coil and a direct fired gas burner. Reproduced with permission from H.M. White, Inc.; **b** - with an indirect fired gas burner section. (Reproduced with permission from Toyota Manufacturing, Inc.

a

b

Figure 9.4. Column- and wall-mounted air heating units GEA Happel Klimatechnik, GmbH, installed in the transmission shop of Ford Werke in Koeln-Niehl, Germany. Air heating units supply either heated room air (**a**) or a heated mixture of outside and room air (**b**).

a

b

Figure 9.5. Radiant heating systems at Scania Partners Co. Truck Plant: **a** - hot water radiators, **b** - overhead radiant panels.

a

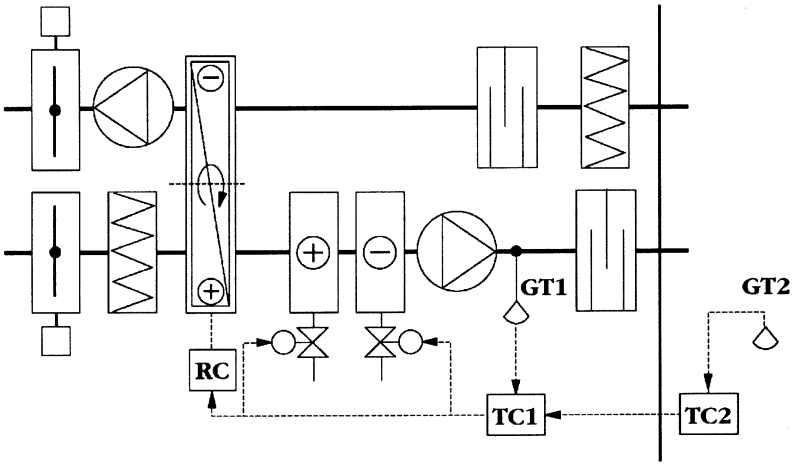

b

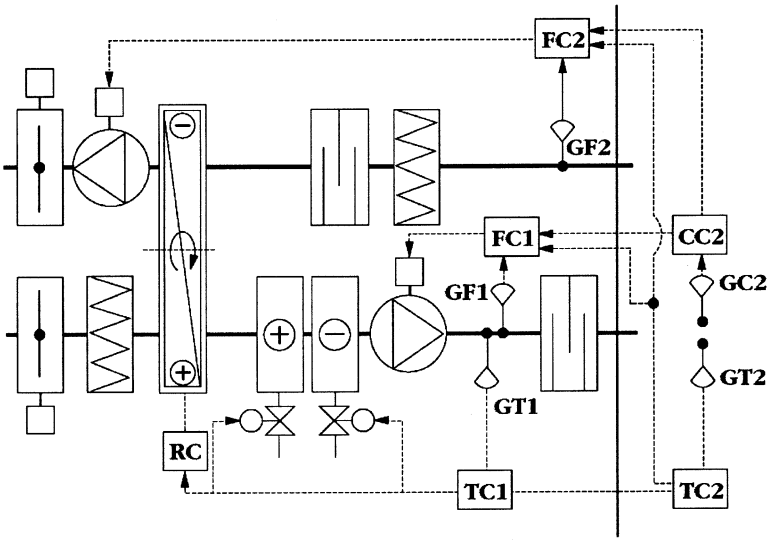

Figure 9.6. Schematic of the basic HVAC system with energy recovery: **a** - with a Constant Air Volume; **b** - with a Variable Air Volume. Reproduced with permission from ABB.

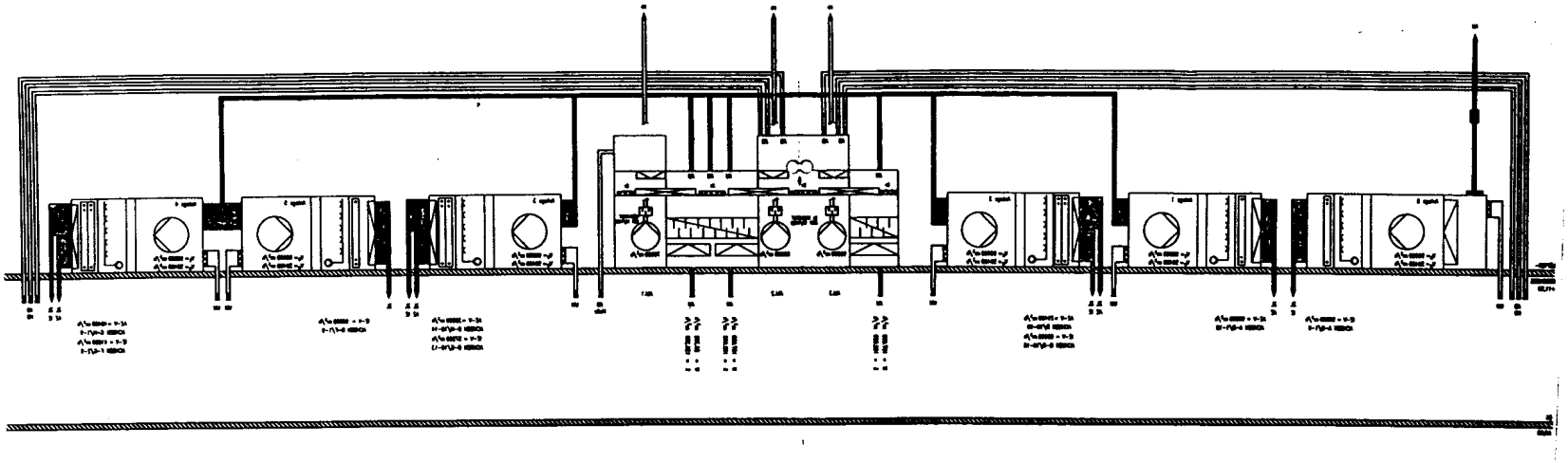

Figure 9.7. Schematics of centralized HVAC system with an energy recovery from air evacuated by general and local exhaust systems. Total exhausted airflow rate is about 500, 000 m^3/h. System supplies 100% outside air supply in work hours and supplies return air during off-shift hours. Exhaust air is filtered prior to passing the energy recovery section. Preheated or precooled supply air is heated or cooled in the individual air handling units. Reproduced with permission from DaimlerChrysler AG in Sindelfingen, Germany.

10. QUANTITY AND METHODS OF AIR SUPPLY.

10.1. Quantity of Supply Air.

Supply air rate must be sufficient to replace air exhausted by process ventilation and local exhausts, to provide dilution of contaminants, management of pressure and airflow inside the building and between the building zones, and to provide the required thermal environment. The amount of supplied air should be the maximum of that needed for temperature control, dilution, replacement and pressure management [5].

10.1.1. Dilution Ventilation Rate. The dilution ventilation rate for general ventilation should be calculated for each of the contaminants produced and not captured by the local exhaust system. The ventilation rate required to maintain a concentration of a contaminant in the occupied zone within the target level (e.g., PEL, MAK, TLV, industry or company level) can be calculated from the following equation based on material balance in the premises [14]:

$$Q_o = Q_{exh} + \frac{G\,(1 - \varepsilon) - Q_{exh}\,(\overline{C_{o.z.}} - C_o)}{K_c\,(\overline{C_{o.z.}} - C_o)}$$

where

Q_O = air supply rate;
Q_{exh} = local ventilation exhaust rate;
G = rate of pollutant generation;
ε = local ventilation capturing effectiveness;

$\overline{C_{o.z.}}$ = average concentration of fume, gas, and particulates in the occupied zone air:

$$\overline{C_{o.z.}} = C_{o.z.}^{max} - 2\sigma_c$$

Average contaminant concentration value is used to calculate the outdoor air supply rate and is often confused with

$C_{o.z.}^{max}$ = maximum desired concentration of fume, gas, or particulates in the occupied zone (e.g., equal to threshold limit value, TLV, MAK, etc.);

σ_c = standard deviation = f(air supply method and air diffuser type, room size and configuration, occupied zone obstruction with process equipment, etc);
C_O = concentration of fume, gas, particulates in the supply air;
K_C = contaminant removal efficiency:

$$K_c = \frac{C_{u.z.} - C_o}{\overline{C_{o.z.}} - C_o}$$

$C_{u.z.}$ = concentration of fume, gas, particulates in the upper zone air (if air is evacuated from this zone), or in the exhausted air. Contaminant removal efficiency coefficients values K_c depend on the air supply method.The quantity of contaminant (fume, oil mist, VOC, gas, or particulates), G, kg/h (lb/h), generated in the space can be calculated using one of the following equations:

$$G = R_1 \times T_{process}$$

where, R_1 is a fume, oil mist, VOC, gas, particulate generation rate, kg/min (lb/min), and $T_{process}$ is an average contaminant release time per hour (e.g., arc time for the welding process), min/hr;

$$G = R_2 \times U$$

where, R_2 is a contaminant generation rate per production unit, kg/(production unit) and U is an average production unit output, (e.g., production units per hour), in the given process.

For welding process, total welding fume generation rates R_1 is a fume (gas, particulate) generation rate, kg/min (lb/min), and T_{arc} is an average arc time for the welding process used, min/hr; R_2 is a fume generation rate, kg (lb), per kg (lb) of electrodes used, and U is an average electrode usage, kg/h (lb/h), in the given welding process. R_1 and R_2 and percentage of the critical components in the fume for the typical welding processes are listed in Tables 5.2 and 5.3. The average arc time for the typical welding processes based on the Welding Institute of Canada data is presented in Figure 10.1. The average electrode usage U for different welding processes should be obtained from the production managers. However, as a rough estimate, the following data can be used [13]:

- Manual metal arc welding - 1 kg/h (2.2 lb/h);
- Mechanized metal arc welding - 4 kg/h (8.8 lb/h);
- Machine (robotics) submerged or arc welding - 4~6 kg/h (8.8~13.2 lb/h).

Capturing effectiveness of the local ventilation system, *g*, can be evaluated as 70~75% if no other information is available.

Concentration of fume, gas, or particles in the supplied air, C_o, depends upon the ratio between the outside and return air and the return air cleaning efficiency.

10.1.2. Supply air rate for temperature control. The air supply rate required to assimilate the surplus heat can be obtained from the following equation based on the heat balance in the premises

$$Q_o = Q_{exh} + \frac{W - C_p Q_{exh} (\overline{t_{o.z.}} - t_o)}{C_p K_t (\overline{t_{o.z.}} - t_o)}$$

where:
W = surplus heat transferred to or generated in the premises;
C_p = specific heat;
$\overline{t_{o.z.}}$, t_o = average air temperature in the occupied zone and supplied air accordingly;
K_t = heat removal efficiency:

$$K_t = \frac{t_{u.z.} - t_o}{\overline{t_{o.z.}} - t_o}$$

$t_{u.z}$ = air temperature in the upper zone of the premises (if air is evacuated from this zone) or of the exhausted air. Heat removal efficiency coefficients values K_t depend on the air supply method (Table 10.1).

10.1.3. Supply air for building pressurization. Building pressurization can be accomplished by providing excess supply air (typically, ~10% or 0.5 ach for large buildings and ~20% or 1 ach for small buildings). The difference between capacities of general supply and local exhaust systems is evacuated from the building by general exhaust system.

10.2. Air Supply Methods

Air supply into production facilities can be natural or mechanical. Natural ventilation systems driven by gravity forces and/or by wind effect, are still sometimes used in cold and moderate climates for summer cooling. In hot climates natural ventilation systems are sometimes used for year round cooling. Natural ventilation systems are inefficient in large buildings.

The majority of ventilation systems in automotive production facilities are mechanical. The most commonly used methods of air supply into such facilities can be classified as:

- mixing,
- thermal displacement
- active displacement
- localized, and
- unidirectional flow.

Mixing-type air distribution. In mixing systems air is normally supplied into the space at velocities much greater than those acceptable in the occupied zone. Supply air temperature can be above, below, or equal to the air temperature in the occupied zone, depending on the heating/cooling load. The supply air diffuser jet mixes with a room air by entrainment, which reduces air velocities and equalizes the air temperature. Properly selected and designed mixing air

distribution creates relatively uniform air velocity, temperature, humidity, and air quality conditions in the occupied zone and along the room height.

Typical mixing type air distribution methods used into automotive production can be classified as {12]:

- air supply into the upper zone (h_0 > 2/3 H_r) with air jets attached or not attached to the ceiling (or as termed concentrated air supply) with the occupied zone ventilation by the reverse air flow (Figure 10.2). H_r is the room height;
- air supply into the upper zone (h_0 > 2/3 H_r) with horizontal (concentrated) air jets assisted with an additional system of vertical and/or horizontal directing jets (Figure 10.3);
- air supply into the upper zone (h_0 > 2/3 H_r) with inclined air jets (Figure 10.4) and the occupied zone ventilated directly by the jets;
- air supply with inclined air jets through grilles or nozzles installed on walls and/or columns at the height from 3 to 5m (10ft to 15ft) (Figure 10.5) from the floor level;
- air supply by conical or compact air jets through the air diffusers installed on the vertical duct drops at the height from 3 to 5 m (10 to 20ft) (Figure 10.6);

Thermal displacement ventilation systems [15]. Air with a temperature slightly lower than the desired room air temperature in the occupied is supplied from air outlets at low air velocities - 0.5 m/s (100 ft/min) or less. Under the influence of buoyancy forces cold air spreads along the floor, and floods the lower zone of the room. The air close to the heat source is heated and rises upward as a convective airstream. In the upper zone this stream spreads along the ceiling. The lower part of the convective stream induces the cold air of the lower zone of the room, and the upper part of the convective airstream induces the heated air of the upper zone of the room. The height of the lower zone depends on the air volume discharged through the panels into the occupied zone and on the amounts of convective heat discharged by the sources (Figure 10.7).

Typically the outlets are located at or near the floor level, and the supply air is directly introduced to the occupied zone. In some applications of displacement ventilation (in computer rooms or in hot industrial buildings) air can be supplied into the occupied zone through a false floor. In other applications supply air outlets can be located above the occupied zone. Returns are located at or close to the ceiling/roof through which air is exhausted from the room.

Thermal displacement ventilation is preferable when contaminants are released in combination with surplus heat and contaminated air is warmer and/or lighter than the surrounding air.

Thermal displacement ventilation system is not effective when air is supplied with a temperature higher than the occupied zone air temperature. Thus, when heating is required, displacement ventilation should be complimented by a hydraulic hot water/steam system with radiators or convectors or with a fired-gas system with overhead radiant panels.

Active displacement ventilation systems [10,15]. Air with a temperature lower than the desired room air temperature in the occupied zone is supplied through air diffusers located above the occupied zone. Supply air velocity is lower compared to one with a mixing type air supply, but higher, than with a thermal displacement ventilation. In the system shown in Figure 10.8., air supplied through ducts with a specially punched nozzles suppresses polluted air of the occupied zone and creates an overlying air cushion that displaces the contaminated air towards floor level exhausts.

Another type of such systems (Figure 10.9) supplies cooled air with low momentum through diffusers installed at a height of about 3 m. Under the influence of buoyancy, cold air flows toward the occupied zone with some entrainment of the ambient air, spreads along the floor and floods the lower zone of the room. Air heated by the internal heat sources rises and is exhaust from the upper zone. Special controlled air diffusers allow active displacement air supply in the cooling mode and a mixing type air supply with a downward projected or inclined jets in the heating mode (Figure 10.9b).

Localized ventilation. Air is supplied locally for occupied regions or a few permanent working places. Conditioned air is supplied towards the breathing zone of the occupants to create zones with comfortable conditions and/or to reduce the concentration of pollutants. In local ventilation systems, air is supplied either through converging nozzles or grilles; nozzles with a swirl insert, specially designed low velocity/low turbulence devices or through perforated panels with an air supply face installed vertically or horizontally (downwards), which are suspended on vertical duct drops and positioned close to the work place. In some situations cooling effect on the working places is achieved by increasing air velocity using cooling fans or additional system supplying recirculating room air (e.g., through flexible fabric ducts with perforated holes).

Unidirectional flow ventilation [15]. Low turbulence flow, air is supplied with a low velocity; supply diffusers and exhaust openings have large surfaces (e.g., perforated panels). Airflow can be either vertical (in industrial applications air typically is supplied from the ceiling and exhausted through the floor), or horizontal (air supplied through one wall and exhausted through returns located on the opposite wall (Figure 4). The outlets are uniformly distributed over the ceiling, floor, or wall to provide a low turbulent “plug”-type flow across the entire room. This type of system is mainly used for ventilating clean spaces (e.g., in paint shops), in which the main objective is to remove contaminants within the room, or in halls with high contaminant loads and a high air change rate (e.g., electroplating shops).

10.3. Selection and design. Air distribution systems should be selected and designed to provide air temperatures and air velocities to meet the technological and comfort requirements in the occupied zone ([1,3,6,7] or other National standards).

10.3.1. Criteria. Among the most important criteria that are used for selection of air distribution method are:

- room floor area and height;
- type of the process and size of process equipment used, space obstruction with this equipment;
- number and type (permanent or temporarily) of working places, their location;
- type and amount of contaminants released into space, heating/cooling loads, and air change rates;
- type of HVAC system used (Variable Air Volume or Constant Air Volume); and
- the data on ventilation effectiveness characterizing different air supply method;

The matrix presented in Figure 10.10, can be used for a general guidance in applicability of different air supply methods based on the desired air change rate (ach), heating and cooling loads. For typical automotive facilities the following methods air supply strategies are recommended. Data from the Table 10.1 can be used as a guidance to evaluate heat K_t removal efficiency coefficient for different methods of air supply in shops with a moderate cooling loads.

Table 10.1. Heat removal efficiency coefficient, K_t. [12]

Air supply method	System operating mode	
	Cooling	Heating
Inclined and horizontal non-attached jets H_0 from 3 to 5 m (10 to 15 ft) H_0 > 6 m (18ft)	 1.15 1.05	 1.0 1.0
Concentrated (with or without directing jets) and attached to the ceiling jets	1.0	1.0
Radial, conical or compact air jets through the air diffusers installed on the vertical duct drops at the height from 3 to 5 m (10 to 20ft)	1.1	1.0
Thermal displacement	1.8 -2.5	-
Active displacement	1.2-1.8	-
Unidirectional flow	>2	-

10.3.2. Air supply into shops obstructed by process equipment

Air distribution design methods currently used by consulting engineers were developed based on studies for empty rooms. They do not reflect the influence of the obstructions on the air distribution and ventilation (heat/contaminant removal) efficiency. Meanwhile in halls of some industrial buildings, process equipment may occupy a significant part of the floor area, or the space height. Workplaces can be located either within 2 m of the floor level or at different heights for operating and servicing of process equipment or to assemble workpieces. Thus, the requirements to the occupied zone thermal conditions and air quality should be extended also to those locations.

Conventional air supply methods recommended for shops with large process equipment [12]:

- concentrated jets into the corridors between obstructions; concentrated jets with vertical and/or horizontal directing jets;
- with inclined jets at the level from 3 to 5 m (10 to 15 ft) from the floor level into the corridors between obstructions;
- through air supply panels with low velocity toward workplaces located at different heights;
- vertical downward with compact or linear jets into corridors between obstructions;
- thermal displacement air supply;
- local air supply toward workplaces

10.3.3. Air supply into shops by VAV (Variable Air Volume) ventilation systems

The design of air supply systems is usually based on the full load (heating/cooling or contaminant emission). When only partial load exists, VAV systems reduce the supply airflow, which in turn, reduces the air velocity at the outlet. This decrease in outlet air velocity reduces the throw, which

may cause formation of areas with abnormal air motion and poorly ventilated zones [11]. Therefore, different operation modes of the system (airflow and initial temperature difference) should be considered in designing a VAV system air distribution. Air supply through controlled air diffusers (e.g., presented in Figure 10.11) and air supply systems with directing jets (Figure 10.3) may be recommended for the VAV systems when an air change rate is reduced by 75-85% from the designed maximum value.

10.4. Typical practices of air supply into auto manufacturing facilities

10.4.1. Machining shops.

- thermal displacement ventilation (Figure 10.12) and
- active displacement ventilation (Figure 10.13) and
- mixing air supply from the height 3 to 5 m (10 to 16 ft) (Figure 10.14)

10.4.2. Body shops and other shops with welding operations

- air supply with inclined jets from the height 3 to 5 m (10 to 16 ft) (Figure 10.15);
- concentrated air distribution into the upper zone with ventilating of the occupied zone by return air flow (Figures 10.16);
- concentrated air distribution with horizontal and vertical or only vertical directing jets (Figure 10.17);
- thermal displacement ventilation (Figure 10.18);
- air supply with inclined jets from truss space (Figure 10.19);.

For the spaces with obstructions higher than 3 m (10 ft), displacement ventilation and air distribution with directing jets or air supply from the height of 3 to 5 m into the space between obstructions are recommended. However, displacement ventilation is not effective in body shops or in welding shops with heavy usage of robotics operations: moving car bodies and robotics arms distract temperature and contaminant stratification along room height and thus eliminate advantages of displacement air supply.

In shops with arc welding operations, to maintain proper gas shielding air distribution systems shall be designed such that the air velocities in the welding zone should not exceed:

- Shielded Metal Arc Welding (SMAW or MIG) - 1.2 m/s (240 fpm);
- Gas Metal Arc Welding (GMAW or rod/stick) - 0.5 m/s (100 fpm);
- Gas Tungsten Arc Welding (GTAW or TIG) - 0.3 m/s (60 fpm).

10.4.3. Assembly shops

- air supply directly to workplaces located along the conveyor (e.g., from small nozzles connected in the duct installed directly above the conveyor (Figure 10.20a), or directly from the duct with a perforation (Figure 10.20b);
- active displacement ventilation of the zones with uncontrolled vehicle exhausts, and touch-up painting (Figure 10.21)
- air supply with inclined jets from the height from 3 to 5 m (10 to 16 ft);
- concentrated air supply into the upper zone with horizontal and vertical directing jets (Figure 10.22);
- active displacement ventilation through air diffusers installed at the height of ~3 m (Figure 10.23.)

10.4.4. Paint shops

- air supply through grilles from the height from 3 to 5 m (10 to 16 ft) (Figure 10.24a);
- thermal displacement ventilation into the paint shop building shell with air diffusers located along paint booths (Figure 10.24b);
- unidirectional flow systems at the spot repair zone. Air is supplied by vertical downward projected air flows through filter media panels installed at the height of 3-4 m (10-12 ft) (Figure 10.25);

- air supply directly to workplaces located along the conveyor (e.g., from small nozzles (Figure 10.26);
- active displacement in the corrosion protection zone through perforated ducts (Figure 10.27).

10.5. References.

1. AFS. 1990. Hygieniska gränsvärden. AFS 1990:13. Publikationsservice. Solna, Sweden. (in Swedish)
2. AIR-IX. 1987. Teollisuusilmanvaihdon suunnittelu. Kauppa-ja teollissusministerio. Helsinki. (In Finnish)
3. ASHRAE. 1992. ASHRAE Standard 55-92. Thermal environmental conditions for human occupancy. American Society of Heating Refrigerating and Air-Conditioning Engineers. Atlanta, GA.
4. ASHRAE. 1997. ASHRAE Handbook. Fundamentals. American Society of Heating Refrigerating and Air-Conditioning Engineers. Atlanta, GA.
5. ASHRAE. 1999, ASHRAE Handbook. HVAC Applications. American Society of Heating Refrigerating and Air-Conditioning Engineers. Atlanta, GA.
6. DIN. 1946. DIN 1946-Teil 2. Room ventilation technique, technical health principles. VDI ventilation rules. Berlin. (in German)
7. ISO 7730. 1993. Moderate thermal environments - Determination of the PMV and PPD indices and specification of the conditions for thermal comfort. International Standards Organization. Geneva.
8. Kristensson, J.A., O.A. Lindqvist. 1993. Displacement ventilation systems in industrial buildings. ASHRAE Transactions. V. 99(1). ASHRAE. Atlanta, GA.
9. LVIS. 1996. Ilmastointi. LVIS – 2000. Paintopaikka: Kausalan Kirjapaino Oy. (In Finish)
10. Lycke, J. 1999. General HPAC design methodology in Automotive Industry: Basic Approach, Air Distribution Methods and Systems in Europe. Proceedings of the conference and workshop “Ventilation for Automotive Industry”. Detroit, April 1999. Zhivov & Associates, L.L.C.
11. Zhivov, A.M. 1990. Variable Air Volume Ventilation Systems for Industrial Buildings. Transactions of ASHRAE. V.96 (2).
12. Zhivov, A.M. 1992. Selection of general ventilation method for industrial buildings . Presented at 1992 ASHRAE Annual Meeting (“Supply Air Systems for Industrial Facilities” Seminar).
13. Zhivov A.M. 1993. Principles of Source Capturing and General Ventilation Design for Welding Premises. Transaction of ASHRAE. V.99(1). American Society of Heating Refrigerating and Air-Conditioning Engineers. Atlanta, GA.
14. Zhivov A.M. 1997. Development and evaluation of a practical model for predicting room and air contaminant distribution. Report for the Institute for research in Construction (National Research Council, Canada). University of Illinois. Urbana. IL.
15. Zhivov, A.M., P.V. Nielsen, G.L. Rikowski, Eu. O. Shilkrot. 2000. Displacement Ventilation for Industrial Applications: Types, applications and design strategy. HPAC Engineering. March 2000.

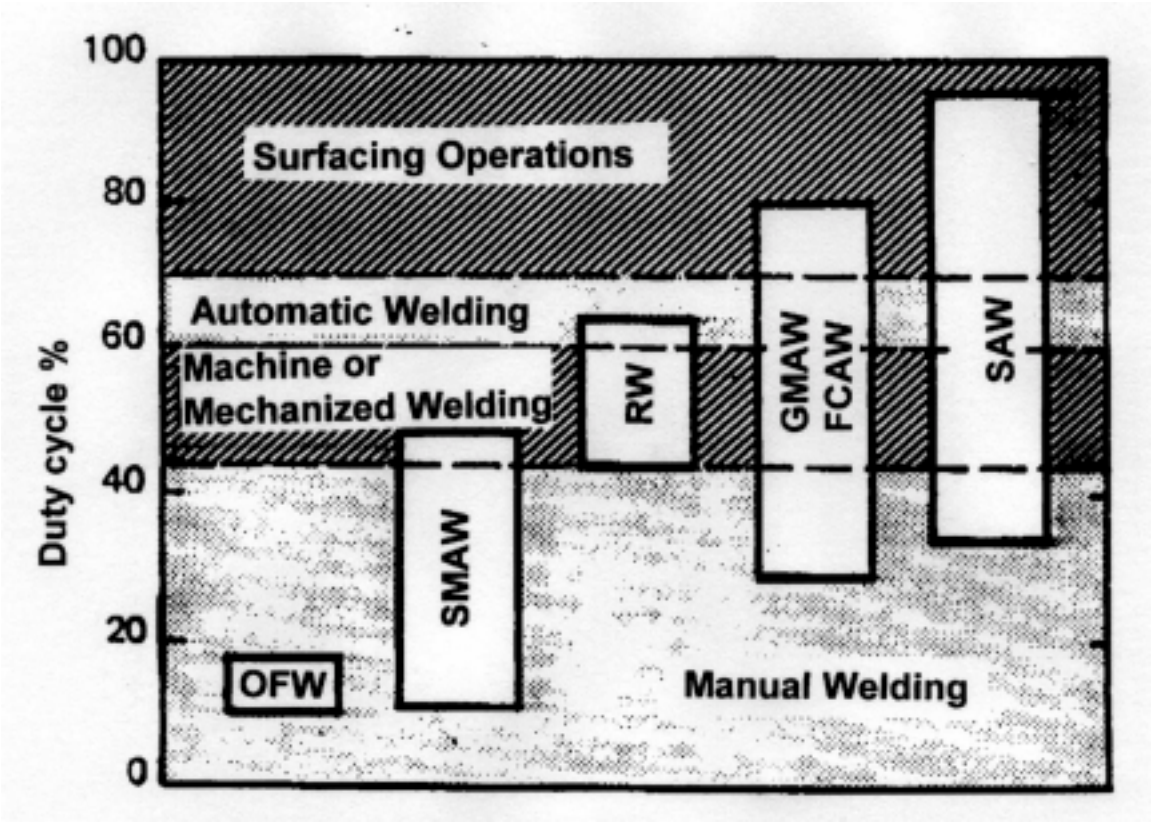

Figure 10.1. Normal range of duty cycles for common welding processes and modes of operation. Reproduced from [19].

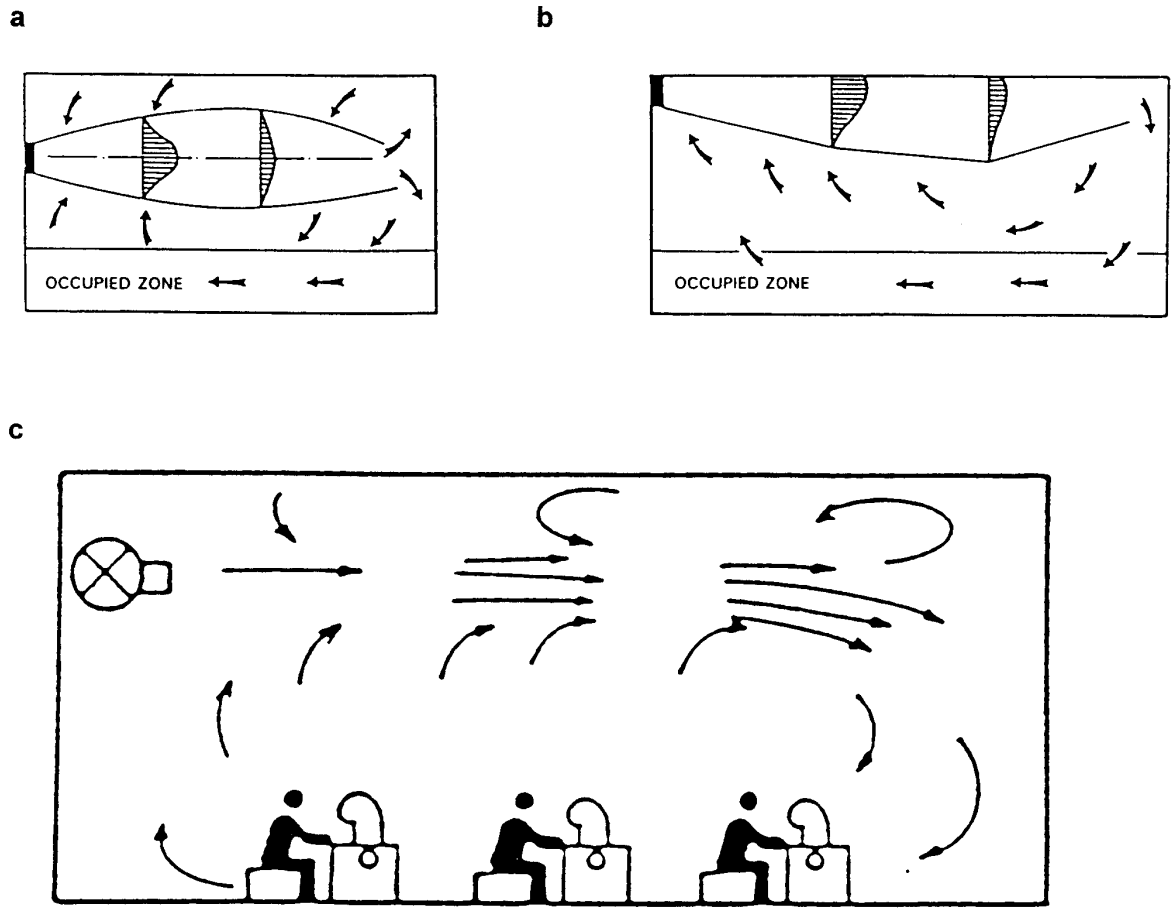

Figure 10.2. Concentrated air supply with occupied zone ventilated by reverse flow: **a** - schematic of air flow pattern with attached jet, **b** - schematic of air flow pattern with not attached jet, **c** - air supply with not attached jet in the shop. a, b - reproduced from [8], c - reproduced from [1].

a

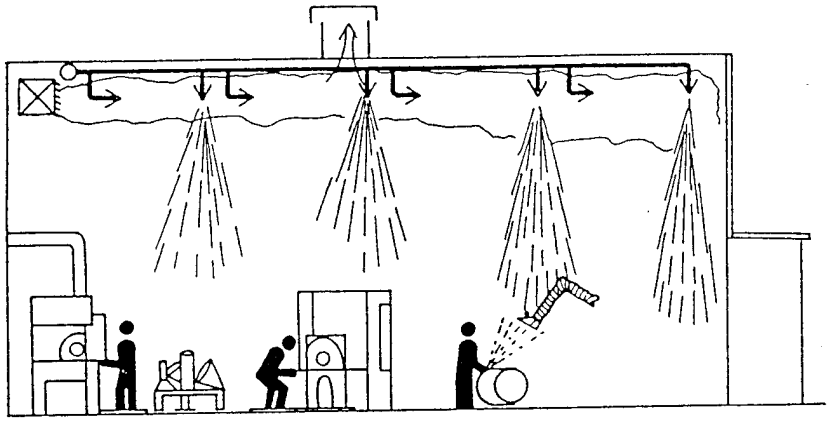

b

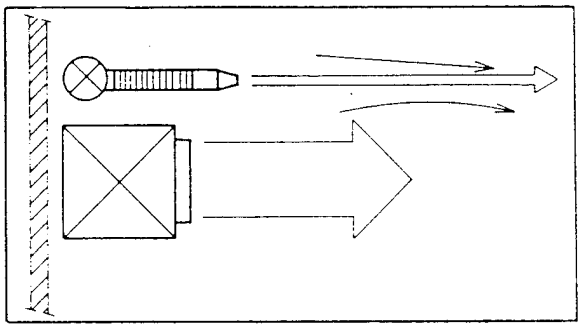

Figure 10.3. Concentrated air supply with (**a**) horizontal and vertical directing jets, (**b**) with only horizontal directing jets. Reproduced from [1].

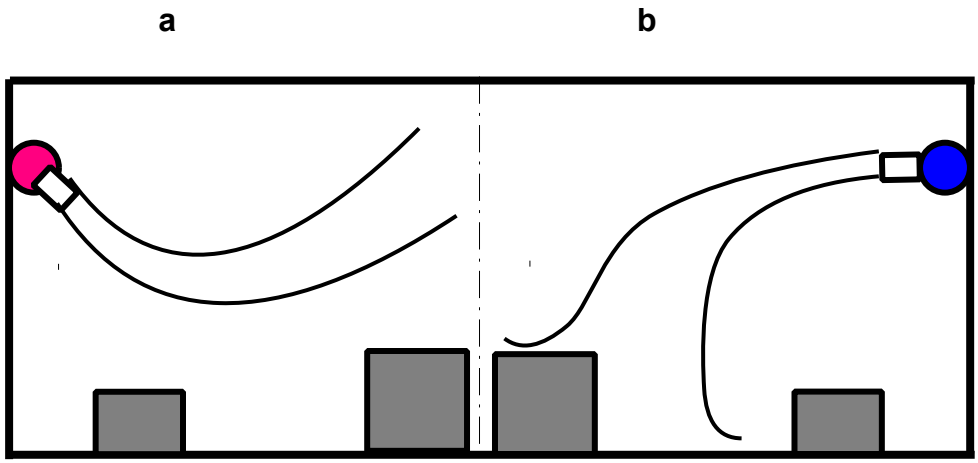

Figure 10.4. Air supply with inclined jets from the upper zone of the ventilated space: **a** - schematic of heated air supply; **b** - schematic of cooled air supply

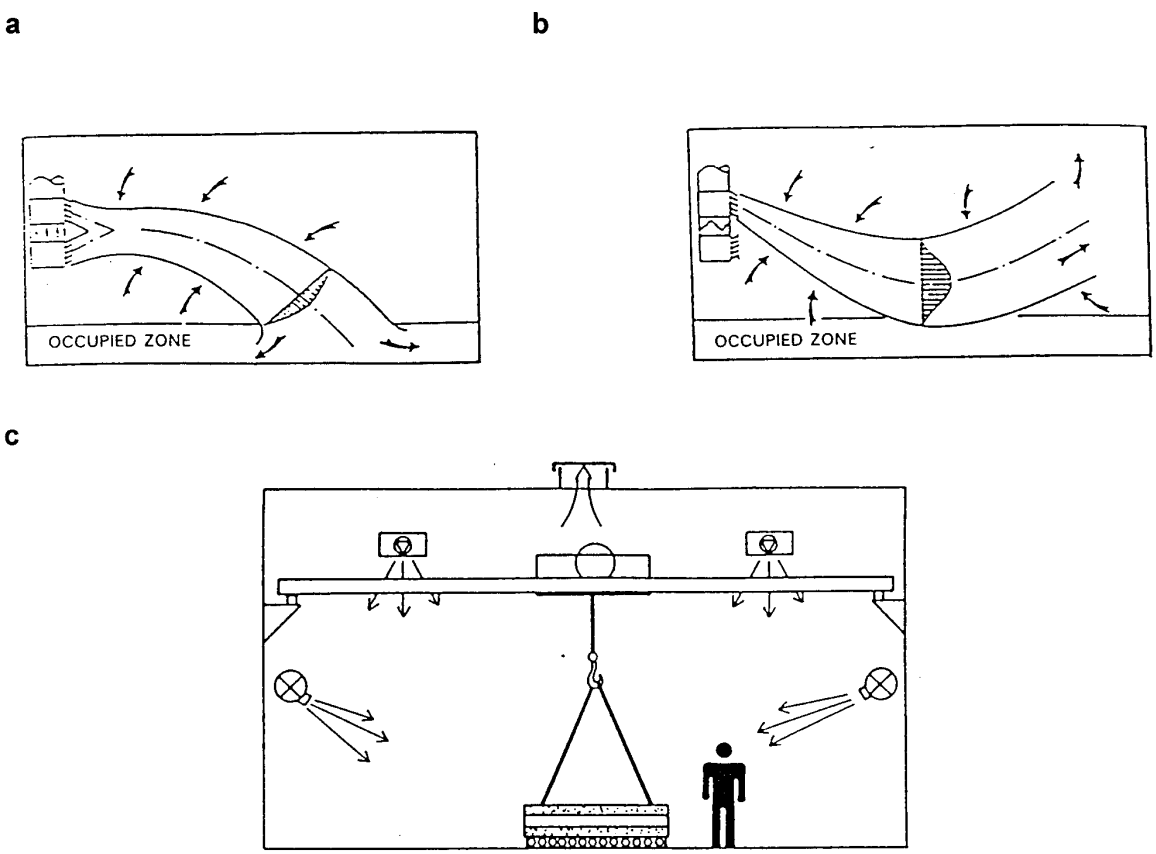

Figure 10.5. Air supply with inclined jets from the height of 3 to 5m: **a** - schematic of cooled air supply; **b** - schematic of heated air supply; **c** - inclined air supply in mechanical shop. **a** and **b** - reproduced from [12], **c** - reproduced from [2].

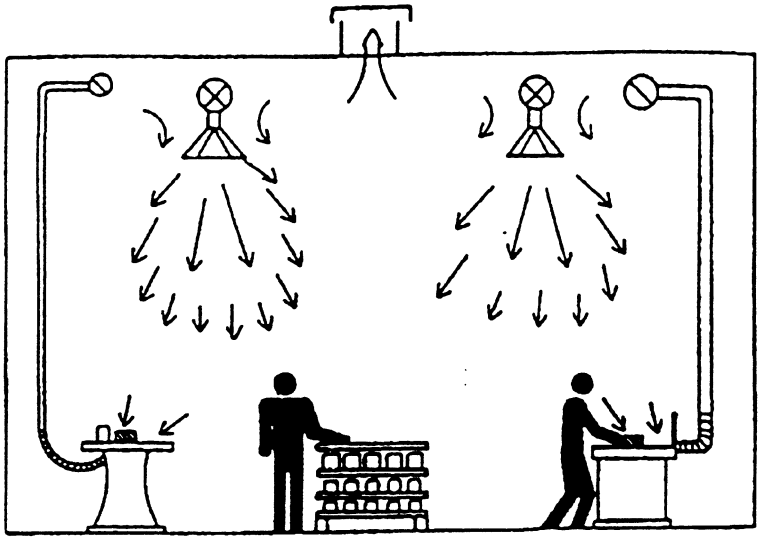

Figure 10.6. Schematic of air supply by vertical jets through diffusers installed on vertical duct drops. Reproduced from [1].

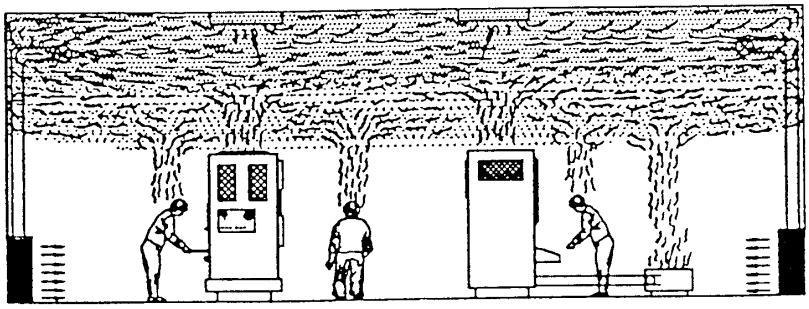

Figure 10.7. Thermal displacement ventilation. Reproduced from [4].

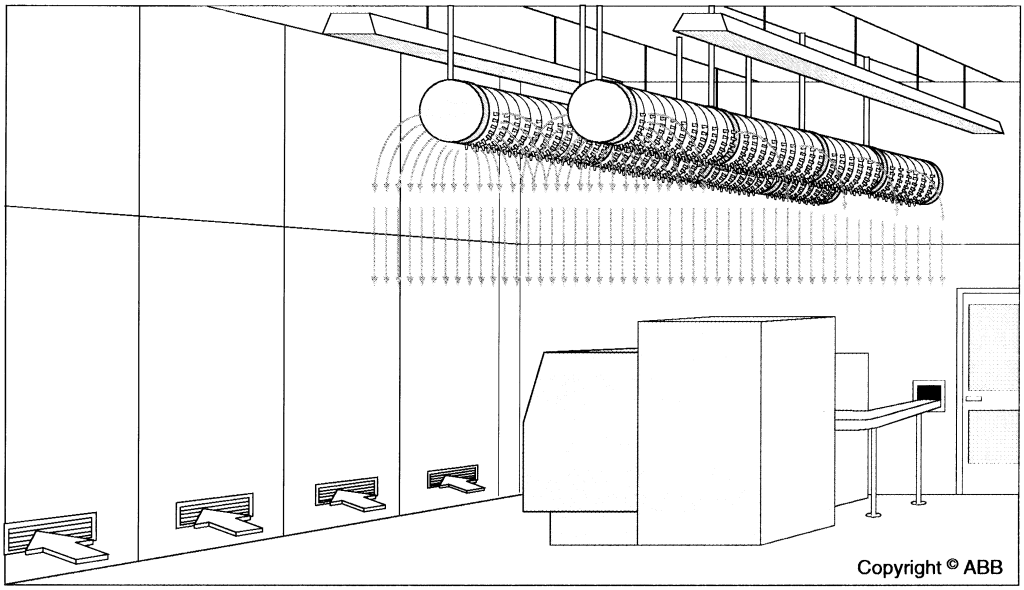

Figure 10.8. Schematics of active displacement ventilation air supply through perforated ducts in mechanical shop. Reproduced with permission from ABB.

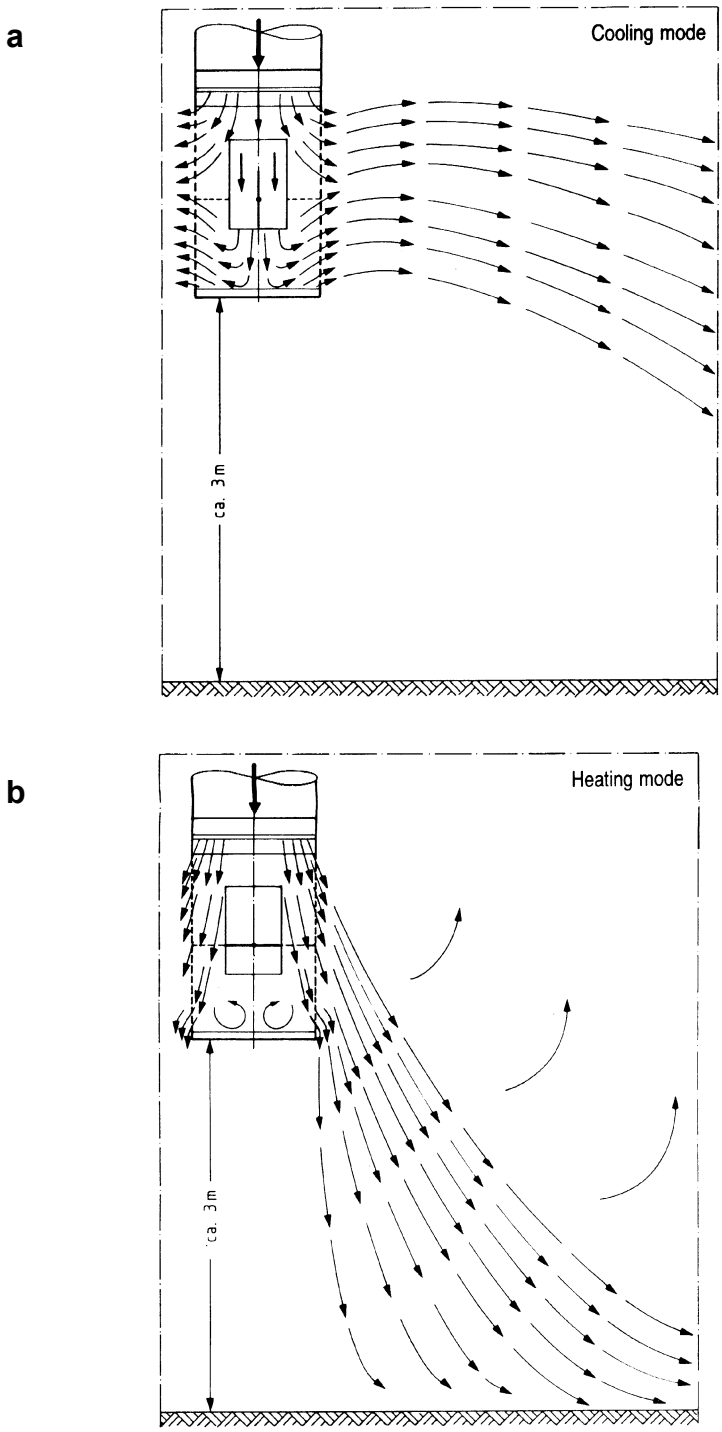

Figure 10.9. Schematics of active displacement ventilation air supply though adjustable air diffuser: **a** - cooling mode; **b** - heating mode. Reproduced with permission from Krantz-TKT.

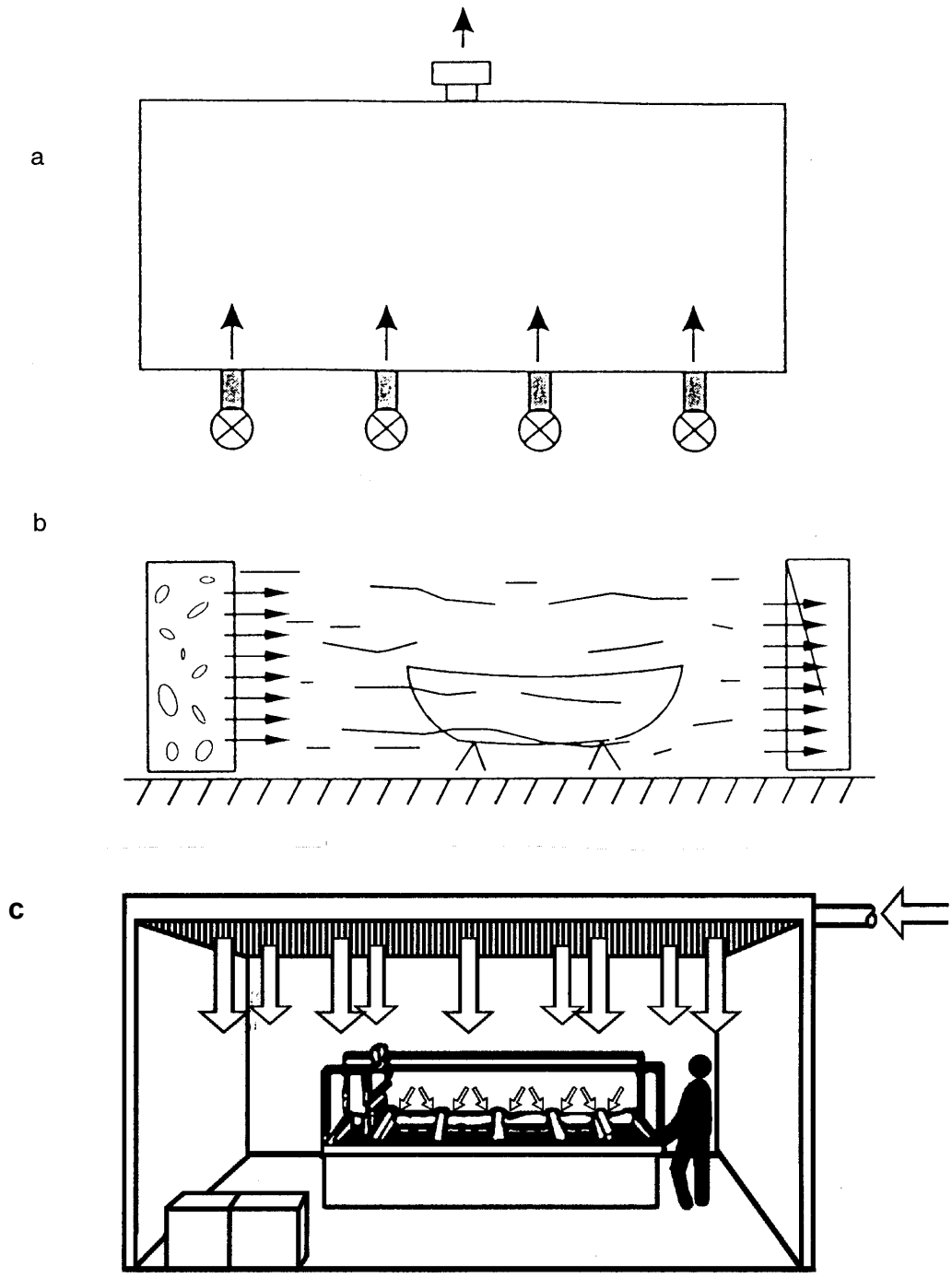

Figure 10.10. Unidirectional flow or piston air distribution systems: a – vertical upward directed airflow system with air supply through the floor and air exhaust by the roof fan; b – horizontal airflow system with air supply and exhaust through vertical panels located in the occupied zone; c – vertical downward directed airflow system with air supply through perforated ceiling. Reproduced from [1,5].

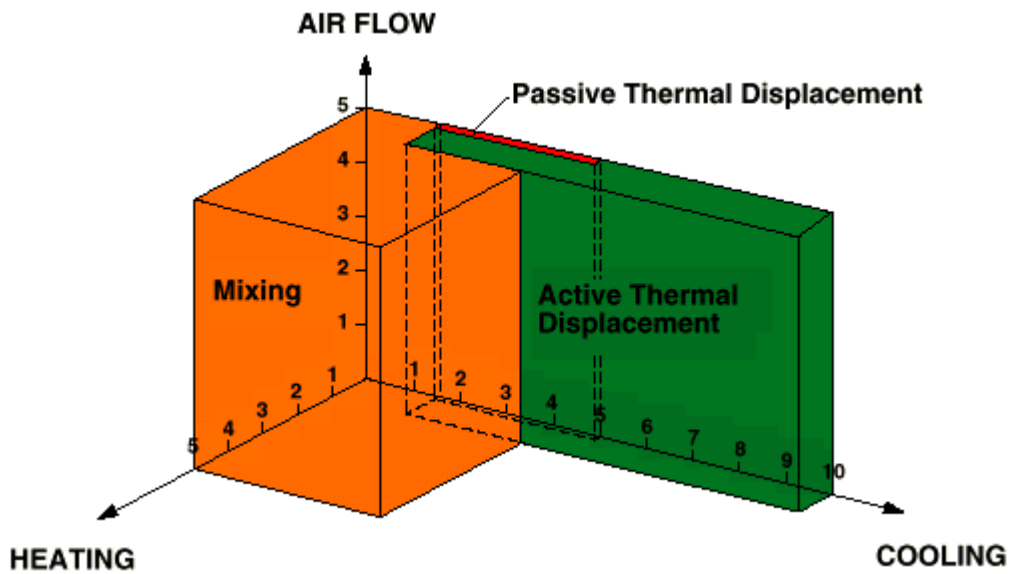

Figure 10.11. Matrix for airflow rate, heating and cooling load range evaluation with different methods of air supply into production facilities: one unit along the airflow axis equals to ~ 7 $m^3/(h \times m^2)$, one unit on heating and cooling load axis equals to ~ 15 W/ m^2 (Reproduced with permission from ABB).

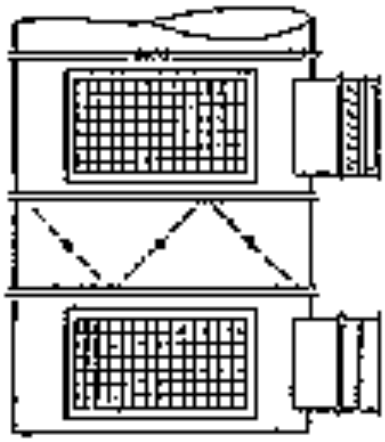

Bottom view

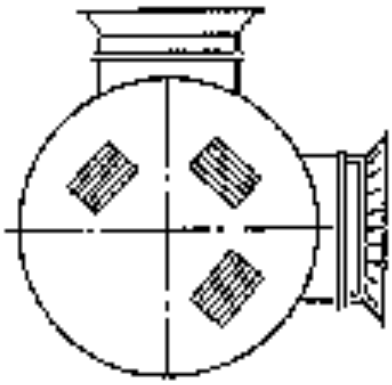

Figure 10.12. Air diffuser allowing a direction and jet characteristics control for air supply with inclined jets in VAV systems. Reproduced from [7].

Figure 10.13. Thermal displacement air supply into the hardening area of machining shop at Scania Partners Truck manufacturing plant in Södertälje, Sweden.
ABB Floormaster system supplies conditioned air through floor-mounted air terminals with a supply air temperature 5°C below the occupied zone air temperature. The system combines a 100% outside air supply with heating and cooling energy recovery in a rotary heat exchanger.

Figure 10.14. Active displacement air supply into the machining hall of the BMW Engine Plant in Stayer, Austria. Air is distributed from the height of ~ 3 m through circular perforated Krantz-TKT outlets VA-H. Supply air is pretreated in heat exchanger coupled with the centralized oil mist control system.

Figure 10.15. Air supply with inclined jets from the height of 5.5 m (18 ft) into machining shop at the DaimlerChrysler Engine Plant in Kenosha, Wisconsin.

a

b

Figure 10.16. Air supply with inclined jets from the height of 3 m into the body shop of the Chrysler Jefferson North Assembly Plant in Detroit, Michigan: **a** - general view, **b** - air diffuser.

Figure 10.17. Ductless air supply with radial jets into the upper zone of the welding shop at the John Deere Harvest Works plant in Moline, Illinois.

Figure 10.18. Concentrated air supply with horizontal and vertical directing jets into the Volvo Cars body shop in Goteborg, Sweden. Vertical directing jets strategically supply air on the fixed workplaces within automated production zone.

Figure 10.19. Thermal displacement ventilation in the welding shop of Scania Cabin Plant in Oskarshamn, Sweden.

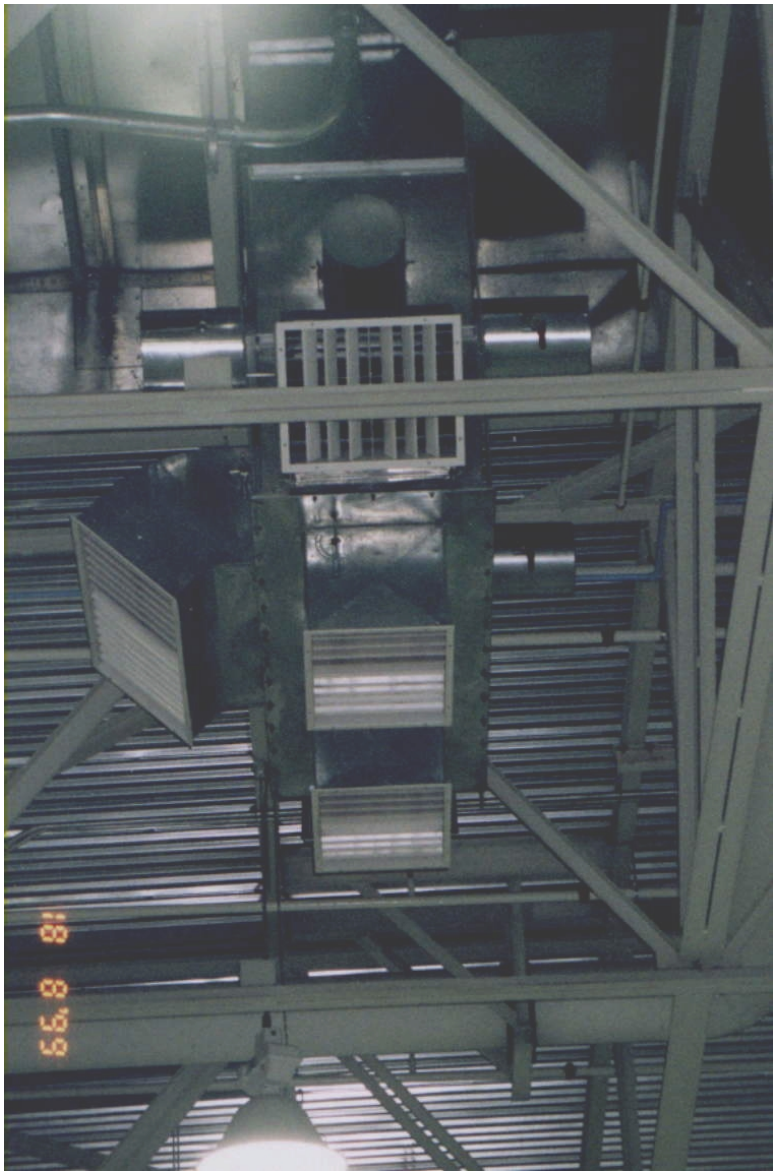

Figure 10.20. Air supply with inclined jets from the truss space into the body shop of the DaimlerChrysler Windsor Assembly plant in Windsor, Ontario.

a

b

c

Figure 10.21. Air supply directly to work places located along the assembly line: **a** - through small nozzles; **b** - through holes in a flexible fabric duct; c - through adjustable grilles. **a** - Volvo Cars plant in Göteborg, Sweden, **b** and **c** - Mercedes-Benz plant in Tuscaloosa, Alabama).

Figure 10.22. Active displacement ventilation with air supply through ducts with a linear perforation into paint inspection area of the assembly line at Volvo Cars plant in Goteborg, Sweden.

Figure 10.23. Concentrated air supply with horizontal and vertical directing jets into the Volvo Cars assembly plant in Goteborg, Sweden.

a

b

Figure 10.24. Active displacement air supply into VW assembly shop (a). Air is distributed from the height of ~ 3m through circular perforated Krantz-TKT outlets (b). Reproduced with permission from Krantz-TKT.

a

b

Figure 10.25. Air supply into the paint shop building shell with air diffusers spread along paint booths: **a** - mixing air supply from the heigh 3 to 5 m (Mercedes-Benz plant in Tuscaloosa, Alabama), **b** - thermal displacement ventilation through perforated panels installed at the floor level (Scania Cabin plant in Oskarshamn, Sweden)

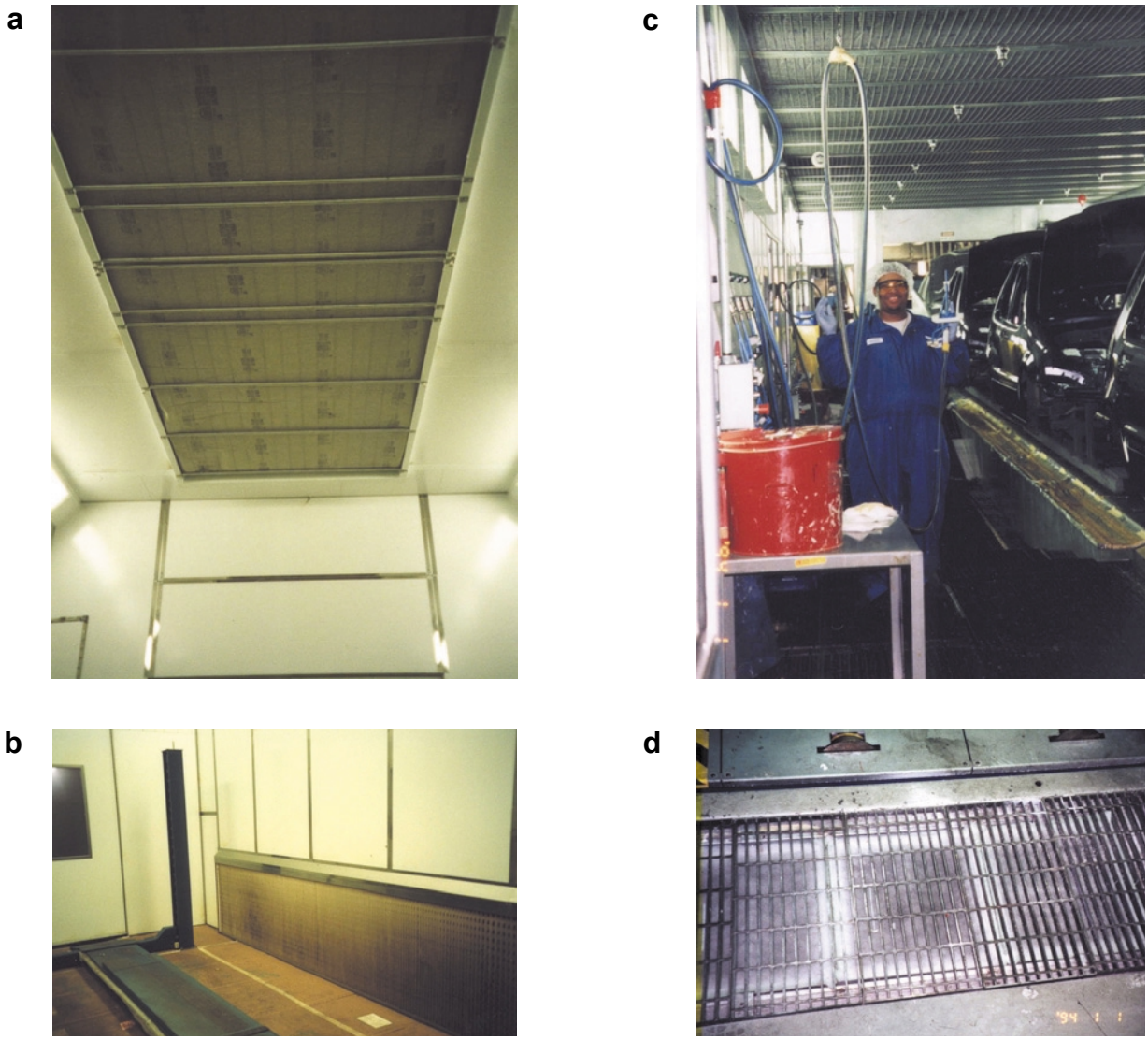

Figure 10.26. Vertical unidirectional flow ventilation in spot repair booths with air supply and return through the filter media panels. Supply panels (**a, c**) are incorporated into the ceiling and return panels are close to (b) or at the (d) floor level. **a** and **b** - Ford Motor Co. Assembly plant in Minsk, Belarus; **c** and **d** - Mercedes-Benz plant in Tuscaloosa, Alabama.

a

b

c

Figure 10.27. Air supply directly to workplaces located along the conveyor through small nozzles into the paint shop of the Mercedes-Benz plant in Tuscaloosa, Alabama: **a** - inspection zone, **b** - repair zone, **c** - air supply nozzle.

Figure 10.28. Active displacement ventilation in the corrosion protection zone of the Scania Partner Truck manufacturing plant in Södertälje, Sweden. Air is supplied through perforated ducts installed in the upper zone and exhausted through panels located near the floor.

11. RETURN (RECIRCULATING) AIR AND ENERGY RECOVERY FROM EXHAUST AIR

11.1. Outside and recirculating air flow. Supply air typically may consist of the outside air and the recirculating air. The minimum outside air flow rates is required to:

- replace air being exhausted by process equipment, local and general ventilation systems;
- control building pressure and air flow from space to space;
- to provide minimum outside air required by national standards (e.g., [4], [5], [6], [9], etc..);depending on the number of workers;
- dilute pollutants generated by process equipment and not captured local ventilation systems.

Typically, the proportion of outside air in the supply air should be the greatest possible to insure better indoor air quality. When toxic gases and particulates are not present, air that is cleaned in general or local exhaust systems can be recirculated back into the building. Recirculated air may not generally be used as a substitute for minimum required outside air. Air recirculation can reduce heating costs in winter and cooling costs in summer. However, during the mild outdoor temperatures, economizer cycle should be considered.

System operation with a 100% recirculated air is possible [9]:

- during the warm-up phase before the start of the shift (with no employees in the shop);
- to maintain temperature and humidity in the space with no workers presence;
- in spaces, where workers are provided with the individual breathing apparatus.

11.2. Requirements for recirculating air cleanliness. The cleaning efficiency applied to the recirculating air and proportion of the recirculating air in the supply must ensure the minimum requirements listed in Table 11.1.

Table 11.1. Maximum values for rating indices for recirculating and supply air. Adopted from [9]* and [6]** .

Group of contaminants	Index	
	recirculating air, I_{rec}	supply air, I_o
Hazardous substances	< 1/10*, < 1/20**	< 1/20
Non-carcinogenic and non-hazardous substances	< 1/5*, < 1/10**	< 1/10

$$I_o = \frac{C_o}{C_{max}} = \frac{I_{rec}}{G_{out}/G_{rec} + 1}$$

where: $I_{rec} = C_{rec}/C_{max}$, C_{rec} = concentration of air pollutant in the recirculating air, C_{max} = limit value for the pollutant concentration in the occupied zone air; $I_o = C_o/C_{max}$, C_o = concentration of air pollutant in the supply air; G_{out} and G_{rec} = mass of outside and recirculating air respectively in supply air.

In the case when there is a mixture of pollutants in supply air:

$$I_{rec} = \sum_{j=1}^{n} \frac{C_{j.rec}}{C_{j.max}}, \quad for \quad \frac{C_{j.rec}}{C_{j.max}} > 0.1$$

Also, ACGIH Industrial Ventilation Manual [1] suggests that recirculation may be permitted when the following conditions are met:

- Exhaust air does not contain chemical agents, whose toxicity is unknown or for which there is no established safe exposure levels;
- The effect of recirculation system malfunction is considered. Recirculation should not be attempted if a malfunction could result in exposure levels that would cause worker health problems;
- The availability of a suitable air cleaner must be determined. An air cleaning device capable of providing effluent air stream contaminant concentration sufficiently low to achieve acceptable workplace concentrations must be available. For example, cleaning of air captured by local exhausts in assembly shop (vehicle exhausts, gluing areas), is impractical and thus, this air can not be recirculated.
- The effect of minor contaminants should be reviewed. For example, welding fumes can be effectively removed from an air stream with a fabric filter; however if the welding process produces oxides of nitrogen, recirculation could cause a concentration of these gases to reach an unacceptable level;
- Recirculation systems must incorporate a monitoring system that provides an accurate warning or signal capable of initiating corrective action or process shutdown before harmful concentrations of the recirculated chemical agents build in the workplace. Method of monitoring must be determined by the type and the hazard of the substance.

.

11.3. Energy recovery. Energy recovery from the air exhausted outside may be used to lower the enthalpy (humidity ratio and/or temperature) of the air supplied into the building during the warm weather and to raise it during the cold weather [3]. The functional difference between sensible heat recovery and enthalpy recovery for preconditioning outside air is illustrated in Figure 11.1. Energy recovery systems can be used in new and retrofit applications. Appl~~ication of th~~e energy recovery systems should be considered based on the life-cycle analysis [3]. The payback period depends upon numerous parameters including:

- System installed cost. Reduction of heating and cooling system size due to reduced load (including coil sizing, ducting, fans, electrical and gas utility connection, mechanical refrigeration tonnage and fuel-fired heating equipment sizing) should be considered;
- Energy costs;
- Additional maintenance costs to service energy recovery equipment. (Note: these may be offset by reduced maintenance for the downsized heating and cooling plant);
- Location/climate. Temperature differences between the exhaust and supply air throughout the year-round cycle. Hourly bin data analysis is the preferred evaluation tool;
- Pressure drop for exhausted and supply air streams through a heat exchanger and the associated parasitic losses in fan power;
- Size of supply and exhaust systems and their proximity, particularly in retrofit applications;
- Pollution of the exhausted air, which may result in additional cost of exhausted air cleaning and/or special requirements to the energy recovery equipment;
- Energy recovery effectiveness.

The effectiveness of cooling or heating energy transfer from the exhausted air to the air supplied from outside is commonly measured in terms of:

- Sensible energy transfer (dry-bulb temperature);
- Latent energy transfer (humidity ratio);
- Total energy transfer (enthalpy).

In northern climate, heating only auto manufacturing plants (except for the paint shops), humidity can vary over a wide range. Therefore sensible energy transfer is of greater importance. The effectiveness of a sensible heat transfer is defined as

$$\varepsilon = \frac{Q_o \rho_o (t_{02} - t_{01})}{\min [Q_o \rho_o ; Q_{exh} \rho_{exh}] (t_{exh.3} - t_{01})}$$

where, Q_o = supply air flow rate, Q_{exh} = exhaust airflow rate; ρ_o = supply air density; ρ_{exh} = exhaust air density; t_{01} supply air entering temperature; t_{02} = supply air leaving temperature; $t_{exh.3}$ = exhaust air entering temperature.

Heating or cooling energy recovery effectiveness depends upon the type of the energy recovery system used and vary between 35% and 80% [9]. The most common energy recovery devices used in industrial ventilation systems are summarized in Table 11.2. Those with higher latent (and thus greater enthalpy) effectiveness will be more important in warm, humid climates or where tighter control of indoor conditions are significant to quality control and production efficiency.

In cost/benefit analysis, the following options may be compared:

- minimum outside air mixed with a cleaned recirculated air supply;
- minimum outside air with energy recovery mixed with a cleaned recirculated air supply;
- 100% outside air supply and air exhaust outside the building without energy recovery;
- 100% outside air supply with energy recovery from exhaust air and processes.

The following areas in auto manufacturing plans may be considered for energy recovery systems application based on the results of the life-cost analysis:

- Machining shops. Energy recovery from the air extracted by centralized exhaust systems can be used for pre-heating/pre-cooling of supply air. Supply and exhaust systems shall have approximately equal air flow rates and located in proximity to each other. Exhausted air should be filtered to remove oil mist prior to entering the energy recovery device;
- Body shops. Energy recovery from the air extracted by large size hoods over robotics welding areas, and air extracted by centralized exhaust systems can be used for pre-heating/pre-cooling of supply air. Supply and exhaust systems shall have approximately equal air flow rates and located in proximity to each other. Exhausted air should be filtered to remove particulates prior to entering the energy recovery device;
- Paint shops. Pre-heating/pre-cooling of air supplied to the building using energy recovered from the process;
- Assembly shops. Energy recovery from exhausted air is used to precondition outside air to meet minimum outside air rate requirements.

Figure 11.2. shows examples of general ventilation systems with energy recovery for body shops and machining shops. The sample data resulted from the economical analysis of some typical situations are summarized in Tables 11.3 and 11.4, and can be used only for the preliminary evaluation.

11.4. References

1. ACGIH. 1998. Industrial Ventilation. A Manual of Recommended Practice. 23 edition. American Conference of Government Industrial Hygienists. Cincinnati, OH.
2. AFS 1996:2. 1996. Occupational Exposure Limit Values. The Swedish National Board of Occupational Safety and Health.
3. ASHRAE. 2000. ASHRAE Handbook. HVAC Systems and Equipment. American Society of Heating, Refrigerating and Air Conditioning Engineers, Inc. Atlanta, GA.
4. ASHRAE. 1989. Ventilation for Acceptable Indoor Air Quality. ASHRAE/ANSI Standard 62-1989. American Society of Heating, Refrigerating and Air Conditioning Engineers, Inc. Atlanta, GA.
5. ASR. 1975. Workplace Regulations ASR 5. Verordung über Arbeitstätten, Arbeistättenverordnung (ArbStättV) vom 20.03.1975. BGBI. I 1975, S. 729.
6. AFS 1993:5. Ventilation och Luftkvalitet. April, 29, 1993. Sweden.
7. Celero Support AB. 1998. General Description of ventilation systems. Private communications with Mr. Sten-Arne H_kansson.
8. Gores, St. 1997. Lufttechnische Gesamtkonzerpte für kühlschmierstaffbelastete Industriehallen. VDI Berichte 1326.
9. VDI 2262. 1994. Workplace air. Reduction of Exposure to Air Pollutants. Ventilation Technical Measures. Part 3. VDI-Hanbuch Reinhaultung. Düsseldorf.
10. Volvo Truck AB. 1997. Tekniska Specifikationer. VVS-installationer för kontorsbyggnad. Göteborg. 1997-09-01.

Table 11.2. Commonly used heat recovery devices. Compelled from [3] and [9].

	Fixed plate, recuperative heat exchanger	Runaround coil loop, recuperative heat exchanger	Rotary wheel, regenerative heat exchanger	Heat-pipe, recuperative heat exchanger	Heat pump, recuperative heat exchanger
Schematic		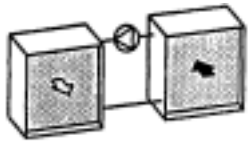		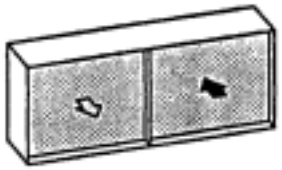	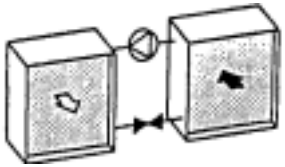
Functional principle	The heat is transferred from supply air via partitions the exhaust air to the	A heat exchange liquid exchanges heat in the exhaust air and supply air by means of circulation pump or natural circulation	Supply air and exhaust air alternatively flow through rotating heat storage medium which picks up and stores heat from the hot air stream and releases it to the cold one. Desiccant wheels also transfer water from the more humid to the dryer airstream.	The heat is exchanged between the evaporator and condenser sides of heat exchanger by means of highly volatile heat exchange medium (e.g., refrigerant) filling the heat pipe tubes	Heat is extracted from the hot air using an evaporator and transferred to the cooler air by means of condenser.
Airflow arrangements	Counterflow, crossflow, parallel flow	Counterflow, parallel flow	Counterflow, parallel flow	Counterflow, parallel flow	Counterflow, parallel flow
Typical sensible heat recovery effectiveness	50-60% sensible 0% latent	40-50% sensible 0% latent	65-80% sensible 60-75% latent	50-60%sensible 0% latent	60-70% sensible 0% latent
Cross-leakage	0 to 5%	No	0 to 10% (can be limited using proper measures)	No	No
Pressure drop, Pa	25-370	100-500	100-170	100-500	100-500
Heat rate control schemes	Bypass dampers and ducting	Bypass valve or pump speed control	Wheel speed control, on/off economizer, bypass	Tilt angle down to 10% of maximum heat rate	Bypass or valve on the liquid line
Most common face velocity, m/s	1 to 5	1.5 to 3	2.5 to 5.0	2.2 to 2.7	2.2 to 2.7
Advantages	Simple design, no moving parts, can be matched to work conditions as required, easily cleaned, low pressure drop	No material transfer, supply and exhaust air ducts can be located on the distance to each other.	High heat recovery effectiveness, good controllability, latent heat transfer, low space requirements, low pressure drop, self cleaning	No moving parts except tilt	High heat recovery effectiveness, good controllability
Disadvantages	Danger of pollutants transmission in the event of leaks (e.g., corrosion), high space requirements, sensitive to dirt, danger of freezing for high exhaust air humidity content.	Complex pipeline and pumping system required, associated parasitic pumping losses, relatively low heat recovery effectiveness.	Cross leakage is possible, but can be limited by means of seals and by positioning the exhaust air fan down the stream from the heat exchanger and the supply fan up the stream from the heat exchanger if necessary due to hazardous contaminants in the exhaust.	High cost, few suppliers	Complex installations, additional energy required, special requirements with regard to place of installation, higher first cost.

Table 11.3. Sample economic analysis for energy recovery ventilation at 25,000 CFM, impacts on first cost

Location_	Detroit, MI	Dayton, OH	Greenville, SC	Tuscaloosa, AL	Toronto, ON
ERV @$3/cfm Cooling @ $2000/ton	$75,000 -71,400 $3,600	$75,000 -71,400 $3,600	$75,000 -84,000 ($9,000)	$75,000 -137,400 ($62,400)	$85,000 -71,600 $13,400

Table 11.4. Sample Economic Analysis for Energy Recovery Ventilation at 25,000 CFM, simple paybacks

Location_	Detroit, MI	Dayton, OH	Greenville, SC	Tuscaloosa, AL	Toronto, ON
1st cost: ops cost: payback 1shift	$3,600 ($6,577) 6 mo.	$3,600 ($5,757) 7 mo.	($9,000) ($3,576) instant	($62,400) ($3,781) instant	$13,000 ($7,228) <2 years
1st cost: ops cost: payback 2 shifts	$3,600 ($12,645) 3 mo.	$3,600 ($10,735) 4 mo.	($9,000) ($6,366) instant	($62,400) ($5,563) instant	$13,000 ($13,498) <1 year
1st cost: ops cost: payback 3 shifts	$3,600 ($19,795) 2 mo.	$3,600 ($16,894) 3 mo.	($9,000) ($9,365) instant	($62,400) ($7,886) instant	$13,000 ($20,971) 7 mo.

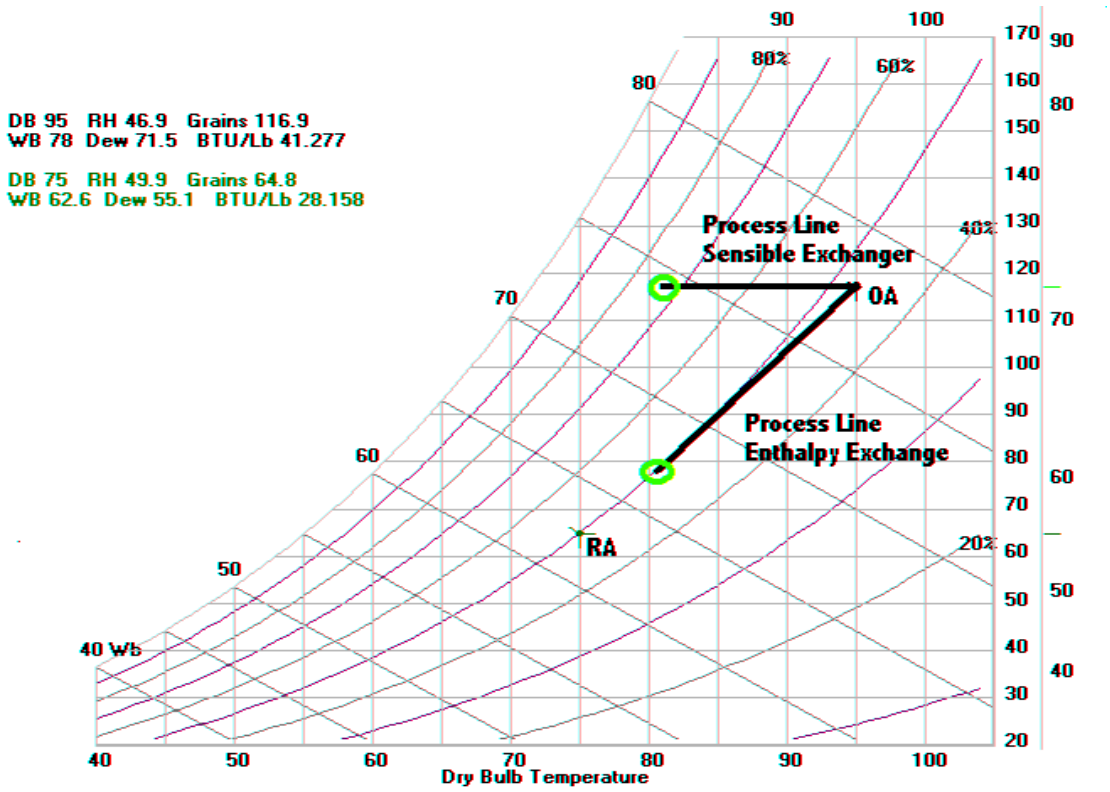

Figure 11.1. Comparison of sensible heat recovery and enthalpy recovery.

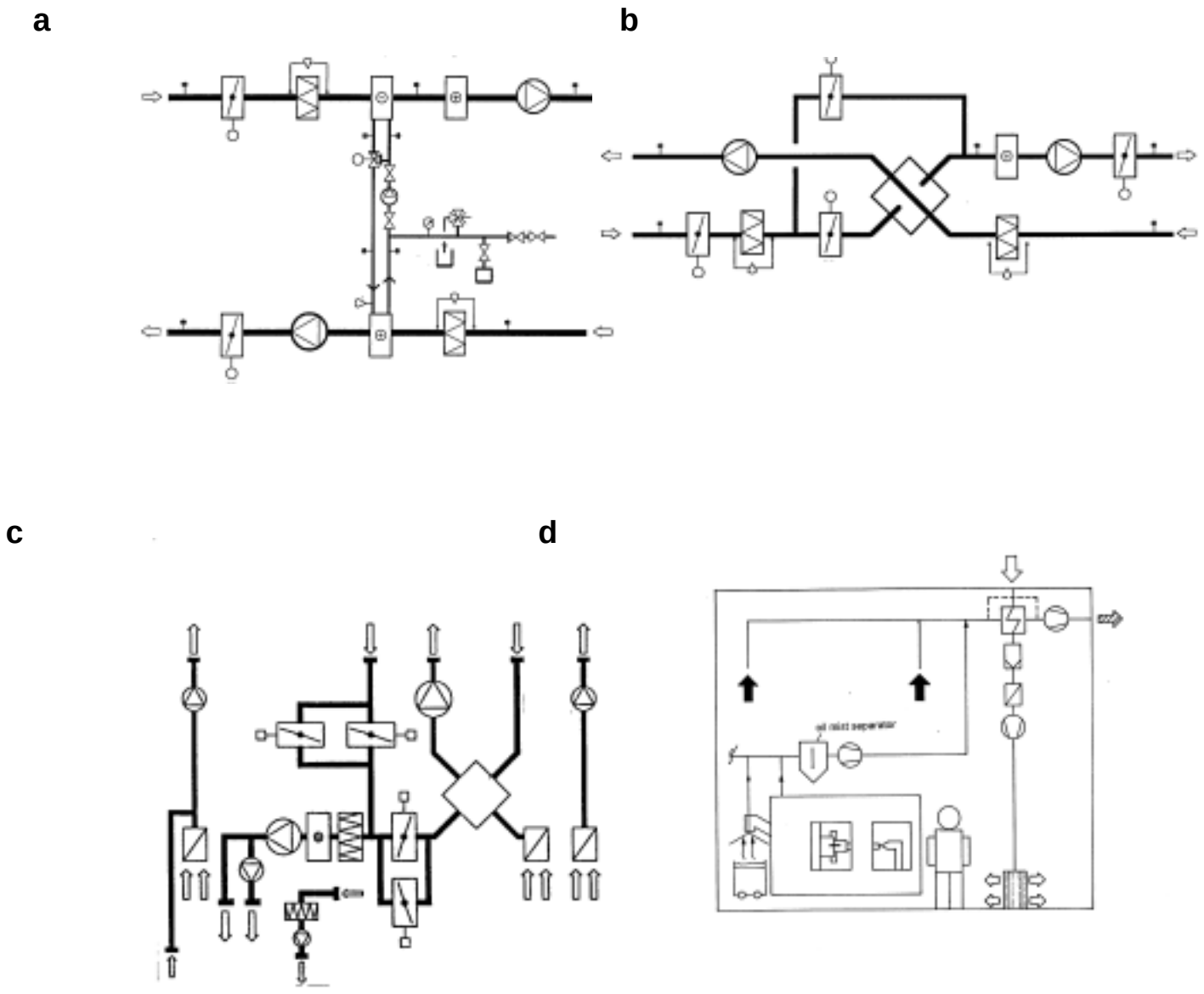

Figure 11.2. Examples of general ventilation systems with energy recovery: **a**, **b** - systems with runaround coil loop and fixed plate heat exchangers at Volvo Truck AB, Goteborg (Sweden)[10]; **c** -system with a fixed plate heat exchanger at Volvo Cars AB, Goteborg (Sweden) [7]; **d** - diagram of a machining shop ventilation system with heat recovery in German auto manufacturing plants [8]. Reproduced with permission from Volvo Truck AB, Celero Support AB and Krantz-TKT.

12. SPECIAL REQUIREMENTS TO DUCT SELECTION AND DESIGN

12.1. General considerations.

Supply and exhaust air duct systems shall be designed to ensure:

- Design airflow rates;
- Low pressure drop;
- Minimum heating and cooling energy loss from air supplied with a temperature higher or lower than room air temperature (e.g., duct insulation);
- Duct noise abatement;
- Prevention of air leakage and supply air contamination; and
- Coordination with other trades.

The designer shall carefully analyze each application and specify the duct materials, duct construction and installation standards, and seal levels required. For duct systems conveying or exhausting contaminated air, or installed in the contaminated environment, the designer shall additionally specify the industrial duct class that most closely describes the intended use of the system. Round ducts are preferred for industrial general supply and exhaust systems, pollution control and dust collection systems.

For duct system construction requirements refer to either SMACNA "Round Industrial Duct Construction Standards" [9], or SMACNA "HVAC Duct Construction standards - Metal and Flexible" [9], VDI 3802 [11], or other relevant national standards, as required by the specifier. For system design Information refer to ACGIH [1], ASHRAE [2,3] and ANSI/AIHA [4]. For duct system fire protection requirements refer to NFPA [6.7].

The duct construction shall be selected and the system shall be designed with consideration of the materials contaminating the transported air (their abrasiveness and concentration), and the minimum air velocity for transporting these contaminants. Duct classes, minimum transporting air velocities, and recommended static pressure loss in supply and exhaust duct systems are listed in Table 12.1

The minimum transporting velocities are specified such as to minimize material accumulation in the duct system (in the case of dry contaminants). Air control devices are to be avoided as much as possible, as deposits can form at these points. In metal working fluids (MWF) collection systems the transport air velocity can be lower than that recommended for transporting dry contaminants. Increased travel time caused by slower velocity contributes to droplet agglomeration, which results in extended filter life.

The ducts must be routinely maintained and cleaned (particularly when transporting flammable materials, e.g., oil mist). Easily dismountable duct components, and maintenance and cleaning openings shall be provided. In the case of liquid and condensable vapors, all horizontal ducts shall be inclined and fitted with devices for trapping and draining the condensate. In the case of vertical ducts, drainable collection points shall be provided at the bottom end of the duct. The ducts shall be manufactured and installed to be sufficiently leak tight in order that the collection efficiency is not impaired by leakage and so that condensing substances do not escape (VDI 2262 [10]).

Depending on the application, operating temperature, and type of air contaminant, different materials are used in industrial duct construction. The most commonly used are: hot-rolled or

cold rolled carbon steel (provides good to excellent paint finishing surface, air temperature below 650°F [343°C]), galvanized steel (not recommended for conveying corrosive aerosols) air temperature below 400°F [204°C], aluminized steel (for air temperatures up to 1050°F [565°C], or when corrosive aerosols are present in the air), plastic materials, e.g., PPV (for oil mist, or when corrosive fumes are present in the air).

Table 12.1. Duct classes, minimum transporting air velocities and recommended static pressure loss (Compiled from [1,8,9])

Duct Class	Nature of Contaminants	Examples	Concentration	Abrasion	Minimum Transporting Velocities, m/s, (fpm)	Max. Static Pressure Loss, Pa, per 10 m (in.w.g. per 100')
1	Gases	General ventilation and make-up air systems installed in the shop with a contaminated environment, gaseous emissions control	None	None	5-10 (1000-2000)	12.7(0.15)– supply systems 21.2(0.25)–exhaust systems
	Fumes, vapors, smoke, spray, mists, and fog	Welding fumes, zinc and aluminum oxide fumes, paint overspray	Light	None	10-13 (2000-2500)	
		Oil-mist and other metalworking fluids	Light	None	See section 12.2	
2	Dry dusts and powders	Light shavings, buffing and polishing dust	Low	Light	15-20 (2500-3000)	
3	Average industrial dust	Abrasive cleaning operations, steel chips	Low	High	18-20 (3500-4000)	

12.2. Special requirements to ducts used for metalworking fluids (MWF) collection systems.

Duct design for MWF collection systems must always consider that the duct has a high probability of having considerable coolant deposited/collected inside. This is especially critical in the design of the duct supports and the selection of the gauge of sheet metal used for the construction of the duct. To prevent the coolant from collecting and remaining inside the duct, the duct needs to be sloped to a low point drain, with a trap, which typically drains to the flume. The suggested design duct slopes are 1% for sloping in the same direction as the airflow, and 2% for sloping against the airflow. Be careful with draining the duct back to the enclosure. The machining process may not facilitate the return of coolant from the duct. The return coolant may carry small machining particles, that by falling on the tool or part can interfere with a critical dimension, or machining operation, leading to excessive scrapped parts. If any ducts drain back to the enclosure,

coordinate with the Machine Engineer for any potential conflicts/problems. Ensure that the duct supports allow for accumulation of coolant.

The design of the duct and mist collector drains should be gravity drain back to the flume or coolant collection tank(s). The drains located at all duct low points and the mist collectors should include traps. Be sure and size all traps for the maximum negative pressure of the fan. If a trap is not deep enough, the negative pressure in the duct will suck the fluid out of the trap, rendering the trap useless. The leakage of air through the trap can reduce the mist collector airflow from the enclosures it is designed to exhaust. When sizing the drains consider if the duct and/or the mist collector will have a wet pipe fire protection system installed in the exhaust duct. If so, consider the drainage of firewater in sizing the drain system. When designing the drain system, ensure that the pipe is sized sufficiently large to drain the coolant. If the coolant backs up in the drain, especially in the mist collector, the coolant can form droplets after the filters, bypass the filtration, and increase the level of oil mist in the plant air.

If fire protection sprinklers are installed in the ductwork, ensure that the fan is specified with enough static pressure to overcome the increased resistance. For duct 250 mm (10 inches) in diameter and less, the pressure drop becomes substantial (verify if fire protection is required in ducts with less than 0.065 m^2 (100 square inch) area, as fire protection may not be required).

In the MWF collection systems, air velocity in the machine enclosure take-off and in the duct branches between take-off and the duct main should be designed to prevent chips and large droplets of coolant into the duct system. The recommended velocity in the machine enclosure take-off is 5 m/s (1000 fpm). Duct velocity should be kept less than 7.5 m/s (1500 fpm) for vertical risers from the enclosures. This allows the MWF to drain back to the machine or low point drain, rather than be carried to the mist collector (air velocity of 7.5 m/s will not typically overcome gravity for particles similar to oil mist). Horizontal duct runs can have velocities from 12.5 m/s to 17.5 m/s (2500 to 3500 fpm). This higher duct velocity will minimize the amount of MWF mist that can settle out of the air stream and deposit on the duct.

It is recommended that mist collection ducts be all welded construction with flange gaskets selected for the coolants used. Verify that the gasket will not weep coolant. It may be worth while to ensure that the flanges not be tightened in a circular manner but rather in an alternating manner. This will prevent the warping of the flanges and possible leakage from an improperly installed flange. Leaking ductwork provides another source of MWF mist that has to be dealt with. The overall result is a less efficient mist collection system.

If at all possible, do not route mist collection duct above any electrical equipment or any other sensitive equipment. If ductwork has to be routed over electrical or sensitive equipment, care is required to ensure that coolant will not drip on the electrical or sensitive equipment.

Use flex duct and quick disconnect between the enclosure and the steel exhaust duct. Make sure that the flex duct material is compatible with the coolant used. This is a place where the running of flex duct can get tricky. Enough flex duct length needs to be provided to allow for easy removal via the quick disconnect, or allow for the enclosure to swing away to allow for access to the machine to perform maintenance or change tools. Try to keep the enclosure part that has to be movable or removable separate from the part of the enclosure that has the exhaust connection. This may not always be possible; therefore, keep the flexibility to have access to the machine in mind. It is suggested that lengths of flex duct should be less than 1.5.m (5 ft), and

that flex duct not be used for horizontal runs. It is recommended that flex duct be installed stretched out minimizing low points or traps for coolant. With flex duct not stretched taught coolant could collect and shorten the life of the flex duct and/or seep through the flex duct (especially if the compatibility of the flex duct and coolant is poor). Without flexibility, maintenance of the machine is more difficult, and may not be performed or will be performed less often, or the duct will be disconnected and left disconnected, which will lessen the effectiveness of the enclosure. Work with the Tool Designer, the Enclosure Designer, and the Machine Engineer to provide the flexibility needed, while not exceeding the design requirements of flex duct.

When selecting flex duct, be aware of the temperature of the discharge air (some estimated enclosure temperatures are 54°C (130°F). Abrasion resistance is a variable that needs to be evaluated since some flex duct materials provide excellent abrasion resistance, and others provide no abrasion resistance. Verify the coolants used, especially if synthetic or semi-synthetic coolants are used. The coolant MSDS sheets provide a breakdown of the chemicals in the coolant.

If sound attenuators are required, care is required to keep the sound attenuator from becoming oil logged.
Damper location can add a trap to collect oil mist. Care is required with the installation of dampers. It is suggested that duct dampers be located in vertical sections of the exhaust duct.

Galvanized duct is cheaper than painted duct; but, the galvanized coating may chip off and it may prematurely plug the filters in the mist collector. If the inside of the exhaust duct needs to be painted, care needs to be exercised so that the paint will not chip and be transported to the mist collector. For some painting applications, it is cheaper to use stainless steel rather than paint. When coating is required evaluate the requirements of the coating and the cost of applying the coating vs. the effect. It may be worthwhile to also evaluate installing stainless steel duct as a lower total installed first cost, without the problem of chipping or corrosion

12.3. References

1. ACGIH. 1998. Industrial Ventilation, A Manual of Recommended Practice. 23rd Edition. American Conference of Governmental Industrial Hygienists, Inc. Cincinnati, OH.
2. ASHRAE. 1999. ASHRAE Handbook. HVAC Applications. American Society of Heating, Refrigerating and Air Conditioning Engineers, Inc. Atlanta, GA.
3. ASHRAE. 1997. ASHRAE Handbook. Fundamentals. American Society of Heating, Refrigerating and Air Conditioning Engineers, Inc. Atlanta, GA.
4. ANSI/AIHA. 1991. Standard Z9.2-1979 (R1991). Fundamentals Governing the Design and Operation of Local Exhaust Systems. American National Standards Institute. New York, NY.
5. NFPA. 1999. NFPA 90A – 99 Standard for the Installation of Air - Conditioning and Ventilating Systems. National Fire Protection Association. Quincy, MA
6. NFPA. 1999. NFPA 91-99 Exhaust Systems for Air Conveying of Vapors, Gases, Mists, and Noncombustible Particulate Solids. National Fire Protection Association. Quincy, MA.
7. NFPA. 1998. NFPA 650-98 "Pneumatic Conveying Systems for Handling Combustible materials". National Fire Protection Association. Quincy, MA..
8. SMACNA. 1999. Round Industrial Duct Construction Standards. Second Edition. Sheet Metal and Air Conditioning Contractors National Association, Inc. Chattily, VA.

9. SMACNA. 1995. HVAC Duct Construction Standards – Metal and Flexible. Second Edition. Sheet Metal and Air Conditioning Contractors National Association, Inc. Chattily, VA.
10. VDI 2262. 1994. Workplace Air. Reduction of Exposure to Air Pollutants. Ventilation Technical Measures. Part 3. VDI-Handbuch Reinhaultung. D_sseldorf.
11. VDI 3802. 1997. Raumlufttechnische Anlagen. Bauliche und technische Anforforderungen. VDI-Handbuch Reinhaultung. D_sseldorf.

13. METHODS OF BUILDING PROTECTION FROM WARM/COLD AIR DRAFTS THROUGH GATES AND OTHER APERTURES.

Air curtains are local ventilation devices that reduce airflow through apertures in building shells[1]. Air curtains:

- provide better thermal environments for workstations located close to doorways;
- reduce energy consumption of HVAC systems;
- support airflow and pressure management control in the building.

The following types of air curtains are typically used in heated or cooled industrial shops:

- Shutter type – create a resistance to airflow through a door and thus reduce the incoming airflow;
- Air curtains with a lobby; and
- Air lock.

Air curtains may be **double-sided** (Figure 13.1a) or **single-sided** (Figure 13.1b). Supply air jets can be directed **upward**, **downward** or **sideward** (with vertical air supply slots). Air curtains used in industrial buildings are often double sided because they deter the airflow better. Upward projected air curtain are recommended when the gate width is greater, than its height. They also provide better coverage of the lower area of the door opening.

Air curtains can supply heated air, air at room temperature, or air with the outdoor temperature.

Air curtains with heated air are recommended for doors smaller than 3.6m x 3.6m (12ft x 12 ft) and that are located in regions with design outdoor winter temperature of –15°C (5°F) and lower.

Air curtains that supply unheated indoor air have application in spaces with a

- heat surplus;
- temperature stratification along the room height;
- acceptable low air temperature (less than 8°C, 46°F), near the door area, and
- buildings located in regions with a mild climate.

Combined air curtain (Figure 13.1.c) consists of two sequentially installed air curtains: (1) heated air curtain and (2) unheated air curtain. They are used

- In regions having a very cold climate;
- For doors larger, than 3.6m x 3.6m (12ft x 12 ft); and
- For spaces with several doors.

---

[1] ASHRAE Handbook. HVAC Applications. 1999. American Society of Heating, Refrigerating and Air-Conditioning Engineers. Atlanta, GA.

Air curtains with a lobby. Their performance is based on transition of the supply jet momentum into counter pressure, which prevents outdoor airflow into the shop (Figure 13.2.). Air is supplied in a direction opposite to that of the outdoor airflow or at a small angle to it. The lobby can be located inside (Figure 13.3) or outside the building (Figure 13.2). Air curtain with a lobby manufactured from the corrugated iron walls that reduce the wind pressure on the gate is shown in Figure 13.2. Air can be supplied through a slot-type air diffuser installed along the duct (Figure 13.2b), or through a row of small size nozzles (Figure 13.2.c). Special measures should be considered to prevent negative pressure in the building when the wind pressure is smaller than the design value used to calculate the supply jet momentum.

A combined air curtain with a specially designed lobby is shown in Figure aperture. Air curtains in the lobby supply untreated outdoor air, while air curtains inside the building supply heated air (Figure 13.4).

Air lock. The building space is protected from the outdoor air by two sequentially installed gates with an enclosed space ("air lock") between them (Figure 13.5). In some "air lock" designs, air curtains are used to supply heated or unheated indoor air into the "air lock" (Figure 13.6). There is only one gate open at a time to let a vehicle in or out the building. After the vehicle enters the "air lock", the first gate closes and the second one opens.

To increase the traffic and to reduce energy loss, flexible doors with a fast opening/closing time are used (Figure 13.7). These doors also allow reduced air leaks through the gaps between the building and the door perimeter.

Also, reduction of energy loss can be achieved by using two settings for the door height (width) opening: regular automatic setting, and occasional manual setting allowing the complete door opening.

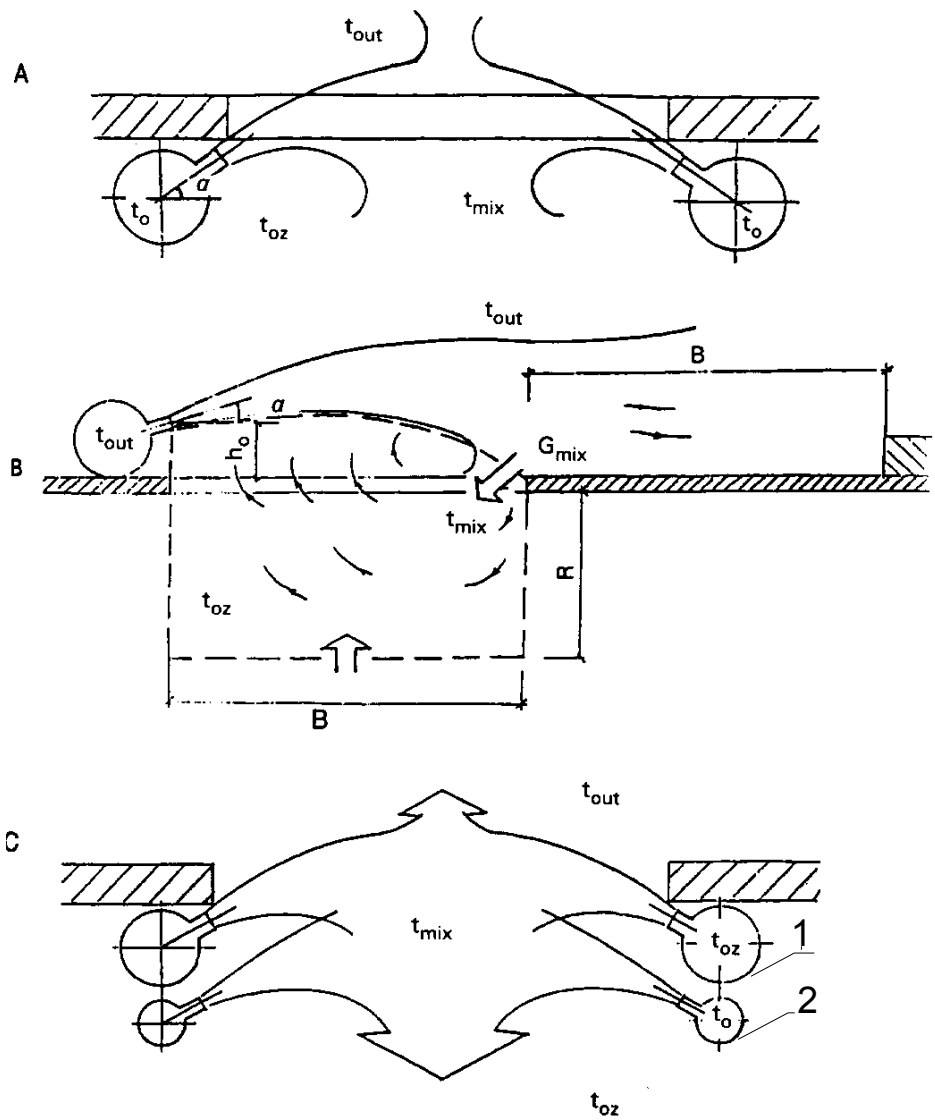

Figure 13.1. Shutter-type air curtains: **A** - heated or unheated indoor air supply; **B** - outdoor air supply; **C** - combined unheated (**1**) and heated (**2**) air curtains.

a

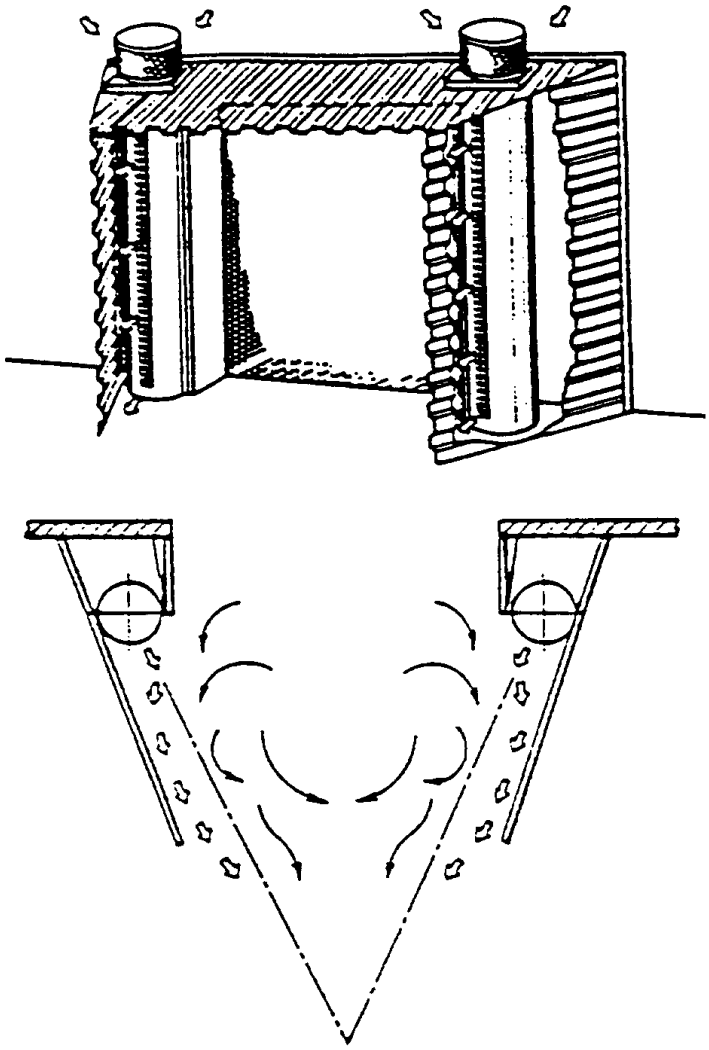

b

c

Figure 13.2. Air curtain with a lobby and outside air supply: **a** - schematic, **b** - general view (Scania Truck Plant in Södertälje, Sweden), **c** - air distribution duct with multiple nozzles (Scania Cabin Plant in Oskarshamn, Sweden).

Figure 13.3. Air curtain with the lobby located inside at the machining shop, Ford Werke Koeln-Neil in Germany. Heated air is supplied through a slot in the floor.

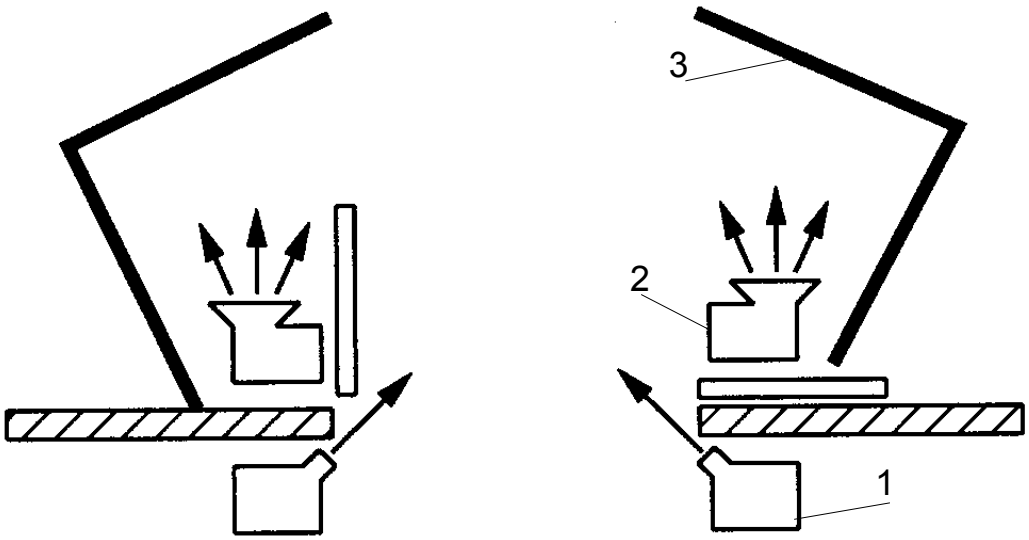

Figure 13.4. Scheme of combined air curtain with a lobby: **1** - heated air curtain; **2** - outdoor air curtain, **3** - lobby.

a

b

Figure 13.5. Air lock at the gate: **a** - Scania Truck Plant in Södertälje, Sweden; **b** - DaimlerChrysler Plant in Sindelfingen, Germany.

Figure 13.6. " Air lock" with a double-sided air curtain, supplied through vertical slots in the walls (machining shop at Ford Werke in Koeln-Neihl, Germany).

Figure 13.7. Rapid door, at Ford Werke in Koeln-Neihl, Germany.

14. OUTDOOR AIR POLLUTION PREVENTION

14.1 Issues

In designing ventilation systems for the automotive industry, two outdoor air pollution issues need to be addressed: (1) the potential for contaminants in the exhaust air of the ventilation system to cause adverse effects in the surrounding environment; and (2) the potential for those contaminants or other contaminants from nearby emission sources to enter the ventilation system at the fresh air intakes.

Paint shops. The process emissions of greatest concern are evaporative losses of volatile organic compounds (VOC's) from spray booths, curing ovens and waste water treatment plants. These VOC's have a history of causing significant odour impacts in surrounding neighbourhoods and re-ingestion into building intakes. Clearcoat operations are of particular concern, since clearcoat formulations tend to contain significant amounts of acetates that have particularly strong odours. N-butyl acetate has one of the lowest odour thresholds among the solvents widely used in paint formulations. Some paint shops will use thermal oxidation (i.e., incineration) as a means of controlling some of the VOC emissions from cooling tunnels and ovens, in which case the resulting emissions of carbon monoxide (CO) and oxides of nitrogen (NO_X) are potential concerns. Similar emissions must be considered from curing ovens. Another problem which can occur from paint booth exhaust stacks is the carry out of paint particulate which can cause damage to property on site and off site.

Body shops. The emission of greatest concern is the particulate matter in welding fumes. This particulate matter can include a variety of trace metals, depending on the type of welding that takes place.

Machine shops and forging operations. The emissions of greatest concern are the mists and fumes associated with cutting oils, which can lead to adverse odour impacts in surrounding neighbourhoods. Machine shops and body shops can also produce extensive particulate matter in connection with cutting and grinding operations.

Assembly plants. The emissions of concern include exhaust emissions associated with engine start-up and test stations. Off-gassing of solvents in adhesives used to seal the windshield to the frame and to attached door seals is also a potential concern.

Other air pollution sources. A typical automotive plant will also have utility boilers, space heaters and cooling towers. The exhaust stacks of these systems must be located and designed so as to minimize the potential for the exhaust gases to enter the plant ventilation system. If the boilers and space heaters are fired with natural gas, then CO and NO_X are the contaminants of concern in the combustion gases. When these units are fired with fuel oil, emissions of sulphur dioxide (SO_2) and particulate matter must

also be taken into consideration.

Another important source of air pollution at large automotive facilities is entrainment of diesel fumes from transport trucks into the ventilation air through the fresh air intakes. Particulate matter and NO_X and in diesel fumes are significant potential occupational health concerns. In addition, odours associated with diesel fumes are a common cause of complaints in neighbourhoods surrounding trucking operations.

14.2 Standards and Criteria

Industrial air pollution is generally regulated in three ways:

- emission limits based on available control technology;
- occupational exposure limits, i.e., pollutant concentration limits that are applicable to on-site locations where workers can be exposed to the pollutants;
- ambient air standards, i.e., pollutant concentration limits that are applicable at off-site residences and other sensitive locations;

Emission limits. The US EPA is in the process of establishing national emission standards for hazardous air pollutants (NESHAPs) that are scheduled to affect the automotive surface coating industry by the year 2000. Individual states, such as

Michigan, already have emission limit requirements for various pollutants that are relevant to the automotive industry. The Bureau of National Affairs in Washington, DC, publishes a valuable reference for information on federal and state air pollution regulations in the US, in which further details on emission requirements can be found [3].

Occupational exposure limits. Most jurisdiction throughout the world have labour regulations that include occupational exposure limits. In the US, for example, the National Institute for Occupational Safety and Health (NIOSH) is responsible for researching and recommending new health and safety standards, which are then put into the regulations by the Occupational Safety and Health Administration (OSHA). NIOSH regularly publishes a tabulation of its recommended exposure limits.

The American Conference of Governmental Industrial Hygienists (ACGIH), develops Threshold Limit Values (TLV's) for a wide range of air pollutants. TLV's represent threshold concentrations that most workers can be exposed to on a day-to-day basis without any adverse health effect. [1]. The ACGIH TLV's are widely used throughout the world as industry standards for occupational exposure.

Ambient air standards. Most jurisdictions throughout the world have at least some ambient air standards and/or objectives that apply to automotive facilities. Cochran, et al. [5] provided a summary of selected air pollutant standards in twenty-three countries which, although out-of-date for some countries, is still a useful reference.

The US has National Ambient Air Quality Standards for six key pollutants: CO, SO_2, nitrogen dioxide (NO_2), lead (Pb), ozone (O_3) and inhalable particulate matter (PM-10). These pollutants are known as the criteria pollutants. In addition to the national standards, some states such as New York State have ambient air standards for various other pollutants, including some of the solvents used in automotive paint formulations and adhesives.

Canada has national ambient air quality objectives for CO, SO_2, NO_2, O_3 and suspended particulate matter [4]. The objectives are not enforceable standards, but are used in establishing air quality policies in Canada. In addition to the federal air quality objectives, many of the provinces have their own standards and/or criteria for ambient air quality. The province of Ontario, for example, has a complicated set of ambient air standards, criteria, and interim standards that apply to CO, SO_2, NO_2, O_3, particulate matter, several trace metals that can be found in particulate matter and a variety of VOC's.[6]

Ambient air standards are in the form of a threshold concentration averaged over a period of 1-hour, 8-hours, 24-hours, 1-year and or other averaging time, depending on the pollutant and the jurisdiction. In a typical jurisdiction, the ambient air standards apply to the pollutant level contributed by all sources at the facility being investigated, in combination with the contribution from any off-site sources of the same pollutant. The contribution from off-site sources is known as the background pollutant level.

14.3 Designing to Meet the Standards

It is necessary to estimate how much of each pollutant emitted from exhaust vents and stacks at a facility will reach sensitive off-site locations and the facility's own fresh air intakes. This is done for a range of stack designs and the results are compared to the applicable occupational exposure limits and ambient air standards, until a design is a achieved that meets the standards. In the case of the ambient air standards, the background level of each pollutant must also be considered in this analysis.

The analysis generally follows a three-step process:

- estimation of the pollutant emission rates for the on-site sources;
- dispersion modelling to estimate the pollutant concentrations that will occur at sensitive off-site locations and at the facility's own fresh air intakes;
- determination of background pollutant levels from historical ambient air monitoring data.

The estimation of emission rates and the dispersion modelling are discussed further in subsequent sections of this chapter. The following paragraphs provide some general guidance to assist designers in meeting the standards.

Exit velocity. In the case of and exhaust stream carrying highly odorous or toxic fumes, such as paint solvents or welding fumes, it is generally best to discharge the exhaust stream vertically at a relatively high exit velocity. The higher the exit velocity, the higher the wind speed needed to bend over the exhaust plume. The wind speed, U, needed to fully bend over the plume is about 2/3 of the exit velocity, W (see Figure 14.1). When the exit velocity is high, the probability of occurrence of such a wind speed is low. For most locations, an exit velocity of about 3000 fpm is optimal for minimizing the probability of full bend-over (see Figure 14.2).

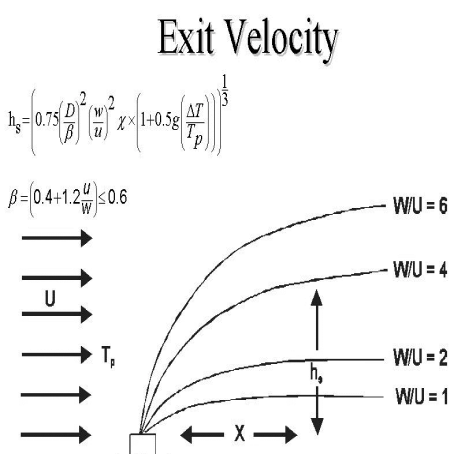

Figure 14.1. Plume rise as a function of wind speed and exit velocity

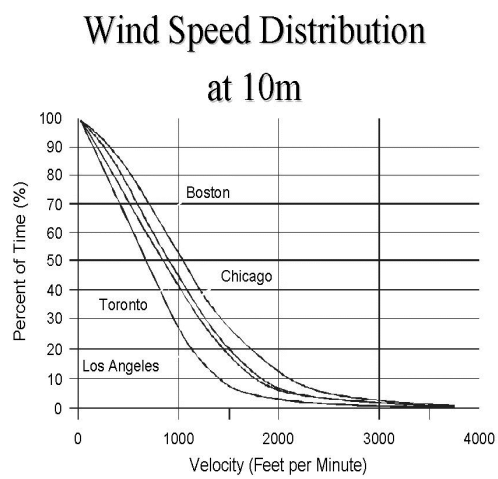

Figure 14.2. Wind speed frequency data

Stack Height. Short stacks and flush roof vents are generally to be avoided for odorous or toxic exhaust streams. The emissions from short stacks and vents are susceptible to downward deflection in the lee of the plant buildings, which can lead to significant impacts at the plant's own fresh air intakes and nearby sensitive locations in the surrounding area. This phenomenon is known as building downwash (Figure 14.3). The potential for downwash decreases with increasing stack height, until a height is reached at which downwash no longer occurs. Further increases in stack height often provide relatively little additional reduction in pollutant concentrations.

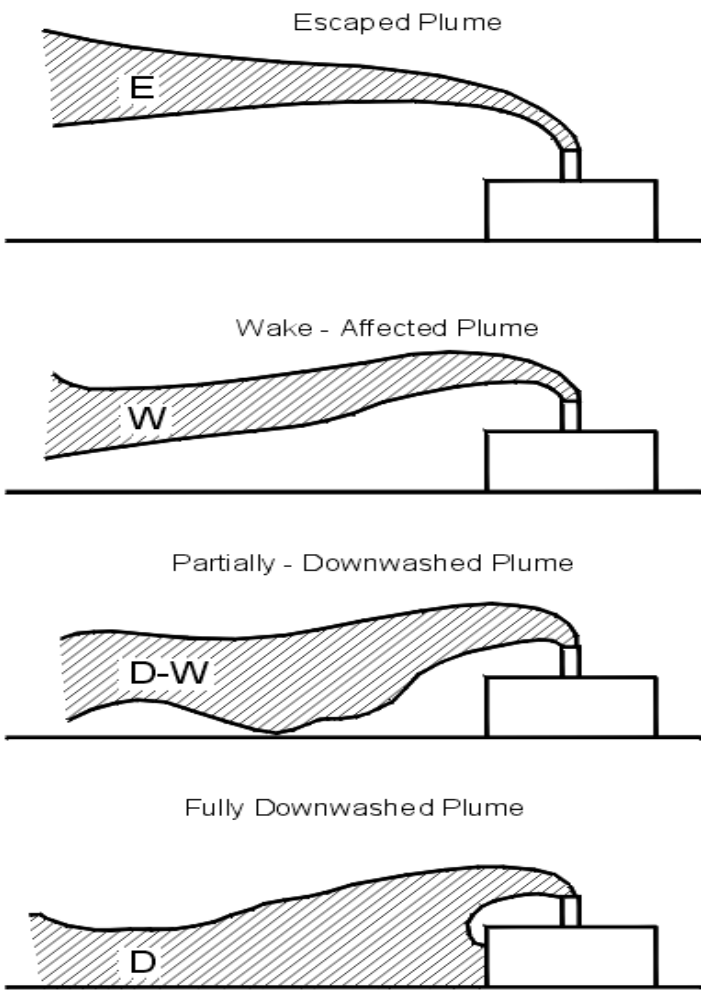

Figure 3. Koga and Way's (1976b) catergories of plume behaviour for effluent emitted from roof - tops stacks or vents.

The required stack height depends on the type and quantity of pollutants being emitted, the exit velocity, the building geometry, the surrounding topography and other factors. In some cases, the required stack can be significantly higher than that required to avoid downwash, and in other cases it can be significantly less. Usually, the height is determined by means of dispersion modelling.

The US federal regulations for tall stacks include a simple calculation for making a first-cut estimate of the minimum stack height that will avoid building downwash. This is referred to as the Good Engineering Practice (GEP) stack height. It is calculated by taking the height of the "tallest nearby structure plus 1.5 times the lesser dimension between the height and length of the structure." The term "nearby" means within 5 times the lesser of the height and length of the structure, and not greater than 0.8 km away.

Another rule of thumb approach can be found in Chapter 43 of the HVAC Applications Handbook [2] This geometric approach is intended to obtain a stack height that will minimize the risk of entrainment of fumes into nearby roof-top fresh air intakes.

Manifolding and Pre-dilution. By clustering exhaust stacks together or manifolding them into a single common stack, it is possible to achieve a significant increase in the vertical momentum of the emissions as they leave the stack. This in turn can reduce the required stack height. Providing dilution air at the base of a stack achieves the same effect and also pre-dilutes the exhaust stream before it is discharged into the outside air. Manifolding can also be used to pre-dilute an exhaust stream if, for example, a contaminant-laden exhaust is combined with general exhaust into a single stack.

Stack and Intake location. It is desirable for stacks emitting odorous or toxic gases to be located downwind of nearby fresh-air intakes under the prevailing wind directions for the site. Wind climate data need to be consulted for this purpose. These data can be obtained from published climate atlases, where available, and from national meteorological services. Suitable data can be obtained on CD-ROM for locations throughout the world from the National Climatic Data Centre in Asheville, North Carolina, USA.

It is also helpful to avoid a direct line-of-site between fresh air intakes and stacks emitting odorous or toxic substances, where possible. Intake locations on the side of building or at the base of a building are usually better than roof-top locations.

14.3 Estimating Emission Rates

Determining the applicable contaminants and estimating their emission rates are the first steps in designing exhaust vents to avoid outside air quality problems. One or more of the following methods are typically used:

- direct measurement of the emissions using accepted stack sampling techniques which is always the preferred approach;
- published emission factors;
- engineering estimates based on mass balance calculations or other suitable method.

The US EPA publishes an extensive compilation of air pollutant emission factors that includes data for boilers and other combustion sources [9], and also includes emission data for various forms of electric arc-welding. This publication does not include emission data for VOC emissions from paint shops, or for oil mists from machine shops.

Where odours are a concern, as is the case for paint solvents and cutting oil fumes, it is highly desirable to measure the relative odour strength of the emissions. Published emission factors are not readily available. In the case of paint shop odours, the magnitude of emitted odours depends on many specific factors, such as the types and quantities of solvents used in the paint formulations, the paint usage rates, the design and operation of the spray systems and the design of the paint booth ventilation.

Measurement of odour emissions can be done by taking samples of the fumes to an odour lab for odour-panel testing. The perception of odour varies significantly from one person to another. Therefore, it is desirable to characterize odours statistically, based on observations by a random sample of the general population. Odour panel tests using a dynamic olfactometer have been developed for this purpose.

The human nose is very responsive to odours and can detect them after only a very brief exposure. Therefore, it is very important to consider short-term odour peaks that result from fluctuating process emissions and from turbulent fluctuations in the outside air. Since odour panel test methods and standard dispersion models do not directly account for short-term peaks, approximate factors must be used to correct predictions based on these methods. Factors that account for turbulent fluctuations in the outside air can be found in dispersion modelling literature (e.g., Turner [8]). Fluctuating process emissions can be taken into account by supplementing odour panel testing with fast-response measurements of total hydrocarbons in the stacks. These measurements can be used to develop approximate peak-to-mean ratios that can be applied to the odour panel results.

14.4. Dispersion Modelling

When choosing a dispersion modelling technique it is important to be aware of each model's limitations and the conditions under which it applies. The following paragraphs summarize the basic types of dispersion models that are available, and Figure 14.4 shows the general approach that is used. Successively more realistic modelling, with successively lower safety factors, are used until a stack design is attained that meets applicable standards and also satisfies all practical constraints.

Screening-level models. The simplest dispersion models are screening-level computer models that are relatively easy and fast to use. They provide first-cut estimates of pollution dispersion for individual exhaust stacks, under worst-case weather conditions. Screening-level models represent the first level of dispersion modelling. If predicted pollutant concentrations are found to be well below applicable standards and criteria, then more sophisticated models may not be necessary. The US EPA's screening-level model, SCREEN3, is widely used throughout the world for preliminary estimates of off-site impacts from stacks and other emission sources. Another US EPA model, CTSCREEN is intended to estimate how pollutants emitted from a stack will behave when they meet a nearby hill or escarpment.

ASHRAE provides a screening-level algorithm for estimating the potential for exhaust emissions to be re-entrained into fresh air intakes on the same building as the emission source. This algorithm is described in Chapter 43 of [2].

General use dispersion models. General use computer models are more sophisticated than the screening-level models. They generally permit modelling of more than one emission source at a time and allow for input of hourly meteorological data, so that maximum concentrations can be predicted for various averaging times (1-hour, 8-hours, 24-hours, annual average, etc.), as required by the standards. Information on frequency of occurrence of elevated pollutant levels can also be derived from these models.

Examples of general use models include the US EPA's regulatory model, ISC3 (industrial source complex model, version 3) and its upcoming replacement, AERMOD. Another example, is a model developed by the California Air Resources Board (CARB), called CALPUFF. The general use models tend to be simplistic in the way they handle special situations, such as dispersion around hills and buildings, and specialized models are needed for this purpose.

Specialized models. Some models are very specialized in their applications. For example, a US EPA model called CTDM-PLUS is intended to predict how pollutants emitted from a stack will behave when they meet a large, isolated hill or escarpment. Specialized dispersion models are also available for simulating unique meteorological conditions that occur near the shorelines of large bodies of water and in valleys. These conditions can lead to unusually elevated pollutant levels.

Computational Fluid Dynamics (CFD) – a three-dimensional computer modelling technique designed for general purpose fluid flow applications -- has been demonstrated to be successful in modelling the behaviour of emissions from short stacks on buildings with simple shapes. For more complex situations, the accuracy of the plume dispersion predictions may be less than desired as a result of limitations in the equations predicting the effects of turbulence. CFD also currently does not have the same ease of modelling a wide range of wind angles and wind speeds as other modelling techniques, but it provides high-resolution results and has other features that are useful in specialized applications.

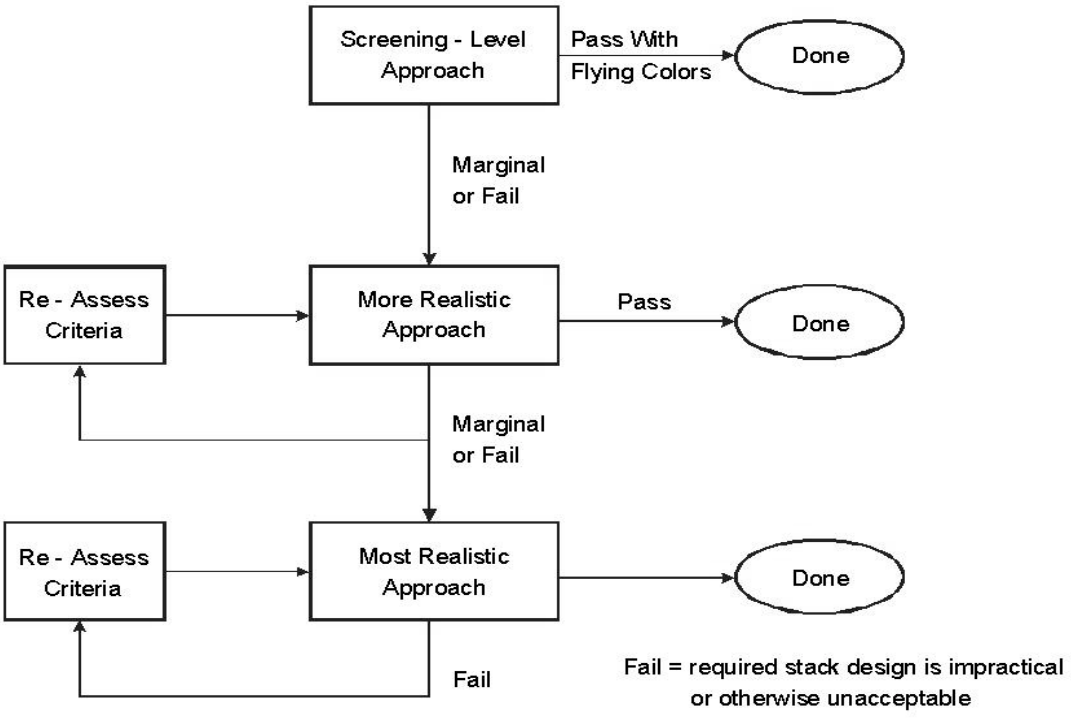

Figure 14.4. Air quality study flow chart.

Physical modelling, using a scale model in a boundary-layer wind tunnel, is the best specialized model for studying dispersion from short stacks in built up terrain. It is also useful for studying dispersion in areas of complex topography. It can account for any building geometry, no matter how complex and is practical for simulating a wide range of wind angles and wind speeds. Further information on wind tunnel modelling procedures is provided in published guidelines [9].

14.6 References

1. ACGIH. 1998. *TLVs and BEIs*. American Conference of Governmental Industrial Hygienists, Cincinnati, OH.
2. ASHRAE. 1999. ASHRAE Handbook. HVAC Applications. American Society of Heating, Refrigerating and Air-Conditioning Engineers. Atlanta, GA.
3. The Bureau of National Affairs, Inc., 1998: Air Pollution Control, BNA Policy and Practice Series, ISSN 0196-7150.
4. Clean Air Act, Ambient Air Quality Objectives Order, No. 1, C.R.C. 1978, c. 403.
5. Cochran, L.S., R.A. Pielke and E. Kovacs. 1992. Selected International Receptor-Based Air Quality Standards. JAWMA. 42(12). Pp.1567-1571.
6. Ontario Ministry of the Environment, 1994: Summary of Point of Impingement Standards, Ambient Air Quality Criteria (AAQCs), and Approvals Screening Levels (ASLs), Toronto, Ontario.
7. Snyder, 1981: Guideline for Fluid Modelling of Atmospheric Diffusion, US EPA, 600/8-81-009.
8. Turner, D. B., 1994: Workbook of Atmospheric Dispersion Estimates, An Introduction to Dispersion Modelling, Lewis Publishers, Boca Raton, Florida.
9. US EPA, 1995: Compilation of Air Pollutant Emission Factors (AP-42), Volume I, Stationary Point and Area Sources.